Pilot corrosion experiment at the Bukov URF

SÚRAO | RADIOACTIVE WASTE REPOSITORY AUTHORITY

Ing. Markéta Dohnálková & Ing. Lucie Hausmannová Ph.D.

The Czech waste disposal package (WDP) for spent nuclear fuel concept is based on the use of steel materials with acceptable corrosion rates that will guarantee the required service life set at 1 000 000 years.

The Czech WDP has been designed to feature an outer casing **made of carbon steel** with a defined chemical composition and strength parameters and a fine-grained structure (for example, S355J2H + N steel meets these requirements). It is anticipated that the inner casing will be made from 316L **stainless steel** and that each inner casing will house just one fuel assembly.

In order to verify the proposed concept, it is necessary both to perform a wide range of experiments on the proposed candidate metals and to validate the properties of the bentonite sealing material. Several of the properties of the proposed materials have already been verified via previous research work, but it is important that the results obtained to date be supplemented by the results of **in-situ corrosion tests,** which will provide information that cannot be provided by laboratory research alone.

Pilot corrosion experiment at the Bukov URF will perform a long-term heated corrosion test with materials designed for the outer casing of the Czech WDP. It will also serve the comparison of the steel material with Cu-OF copper.

Imolestrum et et dolo omnientia consendicia volori audae am

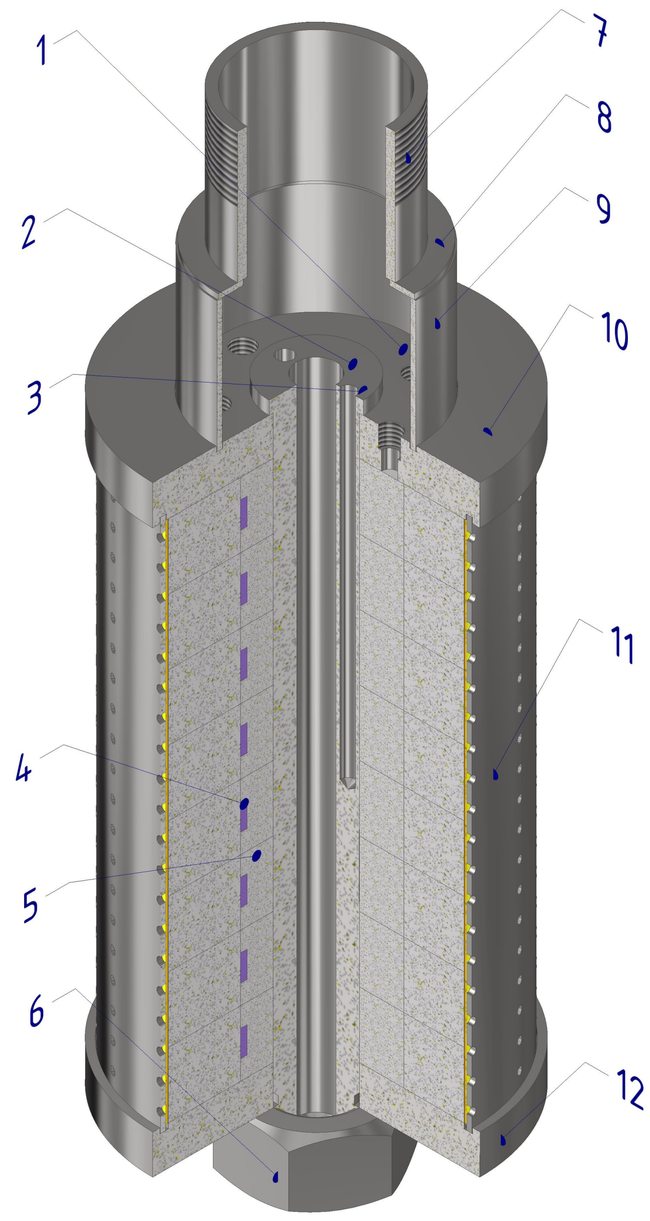

Design of the module for the corrosion tests at the Bukov URF.
(Dobrev D., et. al., 2022)

1 monitoring temperature sensors
2 managing temperature sensors
3 heating cartridge tube
4 corrosion samples
5 bentonite segments
6 M33 nut
7 G2“ welding nipple
8 connecting plate
9 connecting tube
10 cover
11 perforated metal sheet with coarse and fine stainless-steel fabric
12 bottom

Experiment procedure

The conducting of the long-term corrosion experiments is planned for 1, 3, 5, 7 and 10 years. The experiments will commence following the emplacement of all the modules in the respective boreholes. Initially, the modules will be heated to around 40°C in order to verify the integrity of the experimental systems.

The temperature will subsequently be gradually increased up to the target of 70°C at the position of the samples.

The modules will be removed 1, 3, 5, 7 and 10 years following the launch of the experiment. One BCV and one BARA KADE bentonite module will be removed after the given time intervals. The selection of the location of the sampling of the modules will depend on the conditions in the boreholes following stabilisation and taking into account efforts to minimise the influence of the vacated boreholes by the other boreholes in which the experiment continues.

Experiment design

The experiment will involve the study of 11 boreholes, 6 m long with diameters of between 90 and 250 mm placed in the URF Bukov (550 m underground). One module with corrosion samples will be located in each borehole.

→ In situ conditions in URF Bukov
→ 10 experimental boreholes with material samples, various combinations
→ 1 observation and monitoring borehole

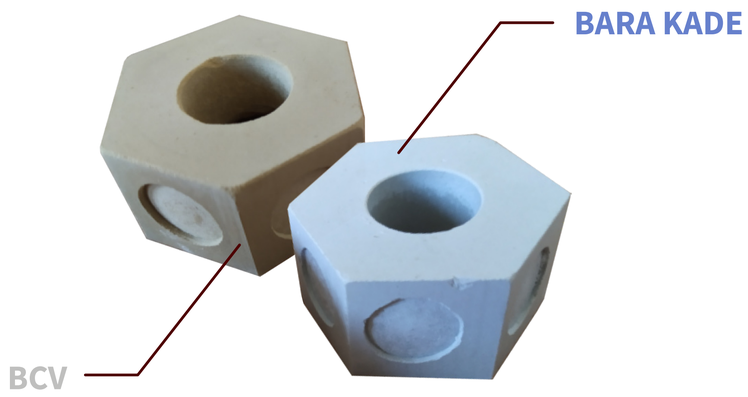

Illustration of the compacted bentonite segments. Inner hexagons
(Dobrev D., et. al., 2022)

The experiments will result in

→ a detailed description of the corrosion behavior of the canister materials and the prediction of corrosion resistance in the order of up to thousands of years,
→ comparison of the behaviour of individual material combinations,
→ the monitoring of the development of microbial activity and an analysis of the influence of candidate materials and bentonite,
→ a description of metal – bentonite interaction processes and their overall influence.

The experiment was initiated in 2021.
Boreholes were drilled this year and experiment will be installed till the end of September 2022.
The project is expected to end in 2033.

surao.cz

References

Dobrev D., Gondolli J., Kouřil M., Mendoza Miranda A.N., Stoulil J. Straka M. (2020): Korozní zkoušky s materiály navrženými pro konstrukci ukládacích obalových souborů, SÚRAO TZ 248/2018 rev. č. 1, 956 str., Husinec - Řež

Dobrev D., Hofmanová E., Mendoza Miranda A. N., Kašpar V., Jankovský F., Kouřil M., Pusztai M., Steinová J., Stoulil J., Šachlová Š., Zelinková T., Zuna M. (2022): Methodology and technical design of the Bukov URF corrosion experiment, SÚRAO TR 576/2022

Forman L., Picek M., Dobrev D., Gondolli J., Mendoza Miranda A.N., Straka M., Kouřil M., Stoulil J., Matal O., Čermák J., Král L., Žaloudek J., Vávra M, Čupr M. (2021): FINAL TECHNICAL REPORT ON THE RESEARCH PART OF THE PROJECT: Research and development of a disposal package for the deep disposal of spent nuclear fuel to the sample implementation stage, Prague, ZZ 544/2021