EUROPEAN COMMISSION

Community Research

SEVENTH FRAMEWORK PROGRAMME

CARBOWASTE

Treatment and Disposal of Irradiated Graphite and Other Carbonaceous Waste

Grant Agreement Number: FP7-211333

- Technical Report T- 6.3.1 –

- Compilation of waste package concepts as envisioned for the ANTARES Project -

Author(s): **F. Cellier, AREVA NP**

Reporting period: 01/04/2008 – 31/03/2010
Date of issue of this report : 08/06/2010

Start date of project : **01/04/2008** Duration : **48 Months**

Project co-funded by the European Commission under the Seventh Framework Programme (2007 to 2011) of the European Atomic Energy Community (EURATOM) for nuclear research and training activities		
Dissemination Level		
PU	Public	
RE	Restricted to the partners of the CARBOWASTE project	
CO	Confidential, only for specific distribution list defined on this document	**X**

Distribution list

Person and organisation name and/or group	Comments
WP 6 partners	
D. Hittner, AREVA NP Inc.	
B. Grambow, Subatech	
D. Vulpius, FZJ	
W. von Lensa, FZJ	

CARBOWASTE		
Work package: 6 **Task: :** 6.3	**CARBOWASTE document no:** CARBOWASTE-1003-T-6.3.1 (e.g. May 2008 as date of issue: 0805)	**Document type:** T=Technical Report
Issued by: AREVA NP (France) **Internal no.:** NEEL-F DC 110 A		**Document status:** Final

Document title
Compilation of waste package concepts as envisioned for the ANTARES Project

Executive summary

This document provides an overview of AREVA strategy regarding HTR waste management by the end of the ANTARES Project. Special emphasis is given to overall irradiated graphite management issues and to spent fuel on-site storage as well as to waste package concepts envisioned.

The irradiated graphite from the operation of the ANTARES could have been readily managed within the spectrum of disposal options which did or would have existed to store/dispose radioactive graphite wastes. At the time of the Project, the options were limited to on-site storage, with separation of the fuel compacts from their graphite host blocks to reduce the volume of graphite that would require disposal as high level waste. Later on direct disposal was an option if dedicated surface disposal or sub-surface disposal facilities become available, depending on the requirements of the disposing nation. Recycling could have also significantly reduced or even eliminated the need to treat irradiated graphite as a waste product but all methods examined warranted further study by the end of the ANTARES Project.

For the spent fuel management, an at-reactor long-term storage in a way similar to the U.S. experience with LWR was selected during the ANTARES pre-conceptual design phase. The work done related to the design of on-site intermediate spent fuel storage facilities meeting all ANTARES plant requirements is described. An assessment of spent fuel storage systems that were currently licensed in the U.S. for LWR fuel, including available cask systems, was performed to determine if they could be used for storing the ANTARES spent fuel. It was concluded that with certain modifications, several systems could be adapted for storing used ANTARES blocks. But in the end, considering the expected high cost of all these options, the design of new storage system concepts more pertinent for HTR spent fuel was suggested in case of continuation of the ANTARES program.

Revisions

Rev.	Date	Short description	Author	Internal Review	Task Leader	WP Leader
00	08/06/2010	Issue	F. Cellier AREVA	V. Grabon, AREVA	B. Grambow, Armines	B. Grambow, Armines

List of Content

1 Introduction 6
2 ANTARES: the AREVA's HTR Concept 8
3 ANTARES Achievements for HTR Waste Management 10
3.1 Overall strategy 10
3.2 Irradiated Graphite Waste Management 11
3.3 Spent Fuel Waste Management 14
3.3.1 Main Requirements 14
3.3.2 Storage system Assessment 14
3.3.3 On-site Intermediate Storage Facility 15
3.3.4 Cask systems 15
4 Conclusions 18
5 Figures & Tables 20
6 References 26

Abbreviations

ACSF	Actively Cooled Storage Facility
ANTARES	AREVA New Technology of Advanced Reactor for Energy Supply
CCGT	Conventional Combined cycle Gas Turbine
CLF	Canister Loading Facility
COSF	Core Offload Storage Facility
DCSF	Dry Cask Storage Facility
FBR	Fast Breeder Reactor
FCF	Fuel Canning Facility
FSC	Fuel Storage Container
HSM	Horizontal Storage Module
HTR	High Temperature Reactor
IHX	Intermediate Heat Exchanger
LWR	Light Water Reactor
MVDS	Modular Vault Dry Storage

1 Introduction

The CARBOWASTE WP6 deals with disposal issues for i-carbonaceous waste and also provides performance assessments for the waste packages entering into environmental compatibility investigations. In the frame of task 6.3 “Improvement of Disposal Behaviour by Suitable Waste Packages”, the present document provides a compilation of the HTR waste management strategy as envisioned by AREVA in the frame of its ANTARES Project, the work on waste storage systems and package concepts being highlighted. As this program was focused on the US market, AREVA had to address in particular HTR fuel cycle back end and waste disposal issues according to USA regulations.

From a general point of view, HTR would have significant potential sustainability advantages in terms of fuel utilization and waste optimization, including the consumption of LWR wastes. What's more HTRs would be excellent consumers of plutonium compared to LWRs. Coupling this feature with the tough nature of the TRISO fuel would also make the HTR inherently proliferation resistant. Nevertheless, in the prospect of HTR fuel reprocessing and refabrication, infrastructures would have to be developed to fully realize the HTR potential. The issues associated with graphite waste disposal have also to be clarified. Thus the ANTARES program provided an in-depth look at the challenges faced in reprocessing HTR particle fuel and the issues surrounding the requirements and availability of disposal facilities for low level waste.

Regarding graphite waste, potential strategies for processing and disposing of irradiated graphite blocks were developed, including the separation of fuel compacts from fuel blocks. Specific studies were undertaken to address the possible incineration of graphite block and state of the art in C-12/C-14 separation methods. At-reactor storage of irradiated graphite was needed anyway to permit the decay of shorter-lived radionuclides (e.g. H-3) prior to disposal offsite. Disposal options include surface burial, sub-surface burial, or deep geological emplacement depending on the requirements of the disposing nation.

Regarding spent fuel management, much work has been performed to address the technical challenges associated with handling, packaging, storing and disposing spent fuel. In conjunction with plant layout activities, optional configurations and strategies for intermediate

spent fuel storage were advanced including both actively and passively cooled methods. An assessment of available cask systems was initiated for further development.

In the end, except for some R&D activities (fuel, codes, materials and components), most of HTR-related actions were stopped in AREVA by end 2006, at the end of the ANTARES pre-conceptual design phase 0. Decision was made to assess actual market opportunities before going ahead with the conceptual design phase… but unfortunately market opportunities are still pending.

2 ANTARES: the AREVA's HTR Concept

Development of the ANTARES design concept was a central element of the AREVA HTR program. In addition to providing a basis for future more detailed design activity, this design work provided a reference point for HTR technology development and evaluating HTR feasibility issues. It has also provided a vehicle for extending HTR expertise within AREVA. The ANTARES design is summarized hereafter.

The ANTARES concept is a graphite moderated, helium-cooled reactor. The goal was a common Nuclear Heat Source that can be used for either power generation or process heat with minimal modification. Early in the program the decision was made to focus on electricity production for the reference concept, because little information was available on potential process heat users.

An IHX couples the reactor to a CCGT generating system. The IHX is required anyway for high temperature process heat applications, and the use of the CCGT provides high efficiency and minimal development risk. As the schematic in Figure 1 shows, the reference configuration has the flexibility to supply process heat at high, intermediate, or low temperatures as required for a specific customer. The Table 1 summarizes the key features of the reference ANTARES design.

The ANTARES reactor design is derived from the US GT-MHR design. It uses an annular prismatic block core rated at 600 MWth. HTR fuel elements can be either pebbles, each the size of a billiard ball, or prismatic blocks, each about 0.8 m tall. Pebble bed reactors contain hundreds of thousands of pebbles, while prismatic reactors contain about 1000 blocks. Each concept has advantages and disadvantages. Pebble bed concepts use on-line refueling while block type reactors use batch refueling. Fuel distribution is controlled in block reactors but randomly in pebble bed concepts. Burn up capability is typically higher for block type reactors, but the limiting power level determined by passive cooling constraints is about 50% higher than for pebble bed reactors. Block type cores also normally have significantly lower pressure drops. The prismatic block concept was selected for the ANTARES, because it allows a higher power level for improved economics, core management capability for greater fuel cycle flexibility, and lower core pressure drop for improved system performance.

The reactor system consists of a solid graphite core containing an annular ring of fuel elements comprising four basic regions: an inner replaceable reflector, the graphite substrate of the fuel, an outer replaceable reflector, and an outer permanent reflector (Figure 2).

3 ANTARES Achievements for HTR Waste Management

3.1 Overall strategy

A key challenge for the ANTARES project was to develop HTR technologies that will efficiently manage radioactive waste, especially irradiated graphite because graphite is the heart of the HTR systems. This challenge had to be met through application of the following principles:

- Minimize the creation of waste through design
- Minimize the impact of the waste once it has been created
- Recycle to the maximum extent possible
- Embrace a “Green” philosophy throughout all phases to maximize environmental acceptability.

As graphite serves as both moderator and reflector, it makes up about 98% of the core volume. It was thus evident that managing the graphite waste stream was a key element in the successful commercialization of HTR. While limiting the impurities in the graphite has the greatest influence on the radionuclide content of the irradiated waste, a "backend" solution was needed anyway, no matter how “pure” the graphite was used.

From a plant perspective, spent fuel elements and irradiated graphite reflector elements comprise, by far, the largest component of the HTR waste stream. The total mass of graphite including the graphite in the fuel compacts was 729 tons. Regarding fuel utilization, one-half of the core (510 elements) was discharged each refueling. Based on an 18-month fuel cycle, one HTR module would produce 20 910 spent fuel elements over its 60-year life. The graphite wastes produced include defueled graphite host blocks, irradiated replaceable reflector blocks, and secondary graphite wastes. The total lifetime discharge of irradiated graphite assuming 60 years of operation was approximately 6 100 tons.

Several recommendations for future actions and overall strategic direction for the spent fuel storage program were developed. According to US practice, it had been assumed that spent fuel would be stored on site. Initially, the spent fuel would have been stored in water-cooled

storage modules adjacent to the reactor then, after a short duration for cooling, transferred to either dry cask storage or other dry-type modular, expandable storage for intermediate / long term storage to take advantage of the potential gains in economics of this configuration.

Ultimately, closure of the fuel cycle would have permitted full optimization of fuel use, especially when considering the symbiotic relation that could exist between LWRs, FBRs and HTRs relative to spent fuel and waste management. ANTARES spent fuel would have been eventually transported to a repository or reprocessing facility. The U.S., French and IAEA requirements/regulations that govern transport of LWR spent nuclear fuel would have applied to ANTARES. It was considered that HTR spent fuel storage and transportation services would be similar to LWRs thus the current service options provided to the LWR industry could have been adapted. Eventually, the existing reprocessing capabilities could also have been adapted to HTR fuel, albeit with the attendant development required. The work performed in that field is not reported here.

3.2 Irradiated Graphite Waste Management

The graphite fuel, moderating and reflecting blocks have to be periodically removed and replaced with fresh material. The anticipated replacement frequency was 3 years for the graphite fuel, 6 years for both replaceable reflectors, and 60 years (life of the plant) for the outer permanent reflector. Radioactive graphite wastes would have required handling and disposal like other radioactive wastes.

Regarding irradiated graphite waste management options, the basic problem to be faced was two-fold. First, the irradiated graphite contains a radionuclide inventory (H-3, Be-10, C-14, Cl-35, Cl-36, Co-60, Ni-63, etc.) resulting in a waste classification that would be US Class C and French MAVL. Second, there was the large world wide inventory of irradiated graphite waste. With limited space and strict controls on waste facility radioactivity limits, direct disposal was not an option and with the significant amount of C-14, simple incineration was not feasible except maybe in the US.

Anyway, options did or would have existed to dispose radioactive graphite wastes, and facilities were needed for storage/disposal of irradiated graphite. Disposal options included surface burial, sub-surface burial, or deep geological emplacement depending on the requirements of the disposing nation.

The Table 2 provides irradiated graphite discharge data for an ANTARES-like 600 MWt HTR that operates for 60 years.

Separation of the fuel compacts from their graphite host blocks would have reduced the volume of graphite that requires disposal as high level waste by more than 80 %. Facilities for compact removal could have been located at a reprocessing plant, centralized facility, or even co-located at a HTR site. However, fission product contamination of the graphite host blocks could have led to dispose of them as high level waste. Methods to either avoid or mitigate the impact of potential contamination thus had to be developed. They include a de-fueling system design that minimizes the possibility that the compacts are damaged during removal, or if damage occurs, one that mitigates the consequences, and fuel blocks designed to facilitate compact removal.

Design/licensing of facilities for disposal of irradiated graphite was required in accordance with the regulations for radioactive waste disposal established by the various countries holding inventories of radioactive graphite wastes, knowing that requirements for irradiated graphite disposal differ from country to country. Direct burial of radioactive reflector blocks could have been possible in the U.S. because of less restrictive radioactivity limits and space availability. In Europe, the requirements for disposal may be more stringent (i.e., requiring disposal of this material in a subsurface facility).

At-reactor storage of irradiated graphite was needed anyway to permit the decay of shorter-lived radionuclides (e.g. H-3) prior to disposal offsite. The actual storage duration was governed primarily by the rules and disposal costs for the available disposal options.

Transport requirements for these wastes would depend on the level and type of activation (e.g. C-14), possible contamination, if any, of the defueled host blocks, and acceptable sizes of blocks and particulates. In the U.S. it is likely that the graphite wastes would meet Class C waste requirements or less and could be packaged and transported accordingly. In Europe, packaging and transport requirements for graphite wastes would likely be commensurate with disposal requirements and may be more stringent because of the disposal requirements for C-14.

It was also possible that graphite waste could be recycled. From a general point of view, whether from newly irradiated stock or legacy waste, graphite recycling would have offered a

means for resolving the irradiated graphite waste problem. Although there would be impediments at each phase of graphite incineration/reforming, production, fabrication, and implementation, it was considered that the introduction of recycled graphite into HTRs might not be as difficult as it appears. With remote refueling, the handling of slightly irradiated fuel or reflector blocks should be viable and if the radioactivity level of the recycled graphite is low enough, it may be possible to construct the entire core from recycled graphite. Even if it were not, dummy graphite reflector and fuel blocks from virgin graphite could have been used to construct the first core, and during the commissioning phase, the recycled fuel and reflector blocks could have been introduced. The dummy blocks could have been used for successive reactor modules or for other plants, further reducing graphite wastes.

Thus recycling could have significantly reduced or could have even eliminated the need to treat irradiated graphite as a waste product. Some methods for recycling irradiated graphite waste that eliminate much of the volumes to be disposed of as waste were investigated in the ANTARES program:

- Annealing: whole blocks are annealed to sufficiently restore properties
- Pulverizing: grinding to a powder for processing and re-manufacturing into blocks with like properties
- Reforming: blocks undergo pyrolysis in a high temperature reformer where the carbon as CO and CO2 can be captured for further processing or use as feedstock to create new but still radioactive graphite.
- Incineration: blocks are burned and the CO and CO2 generated are captured for further processing [1].

Although some of these methods showed promise, they were in the early stages of development and required much R&D before they can be considered viable options. It must be noted that the FP7 CARBOWASTE program deals with some of these methods.

[1] Because of the significant amount of C-14, simple incineration of irradiated graphite, despite being technically feasible and acceptable radiologically, was considered to not be publicly acceptable unless it was accompanied by a backend process that separates C-14 from C-12 and precludes its release.

3.3 Spent Fuel Waste Management

3.3.1 Main Requirements

The operational characteristics were such that the system should support refueling four reactor modules within the minimum envisioned fuel cycle of 12 months. That is, the fuel elements discharged from a single reactor module must be able to be placed into storage within approximately ten months of their discharge from the reactor and the time required to place the elements into the dry storage system can be no more than one month if there is a desire to avoid handling spent fuel during refueling activities. This assumed that placement into the system had to take place between successive module's refueling-related activities.

In order to support various fuel and core management strategies, retrieval of fuel elements from storage and replacement into subsequent operating cores hadn't to be precluded (i.e., the design had to accommodate retrieval, but not necessarily easy retrieval).

The initial capacity of the system had to be sufficient to accommodate the anticipated number of fuel elements discharged from four reactor modules over their first ten years of operation. This translated into a system capacity of approximately 15,000 fuel elements.

The system had to be capable of expansion to provide for storage of all of the fuel discharged from four reactor modules over the expected 60 year life of the plant without disruption of normal plant operation. This translated into approximately 100,000 fuel elements. In order to meet this goal, a separate, longer term storage facility had to be used; transfer of the fuel between storage facilities had to be taken into account and not impact the plant operation.

3.3.2 Storage system Assessment

The existing spent fuel storage facilities and systems were first studied in order to judge their applicability to storage of ANTARES fuel elements and to try to estimate the design, economic and operational impacts should such systems be adopted for the ANTARES plant. Two existing storage systems might have been amenable to modification for storage of ANTARES fuel without significant design impacts. These systems are the MVDS system in use at the Fort Saint Vrain facility and the Transnuclear NUHOMS® canister-based storage system in use at many light water reactor sites.

Both of the systems should have easily supported the goals related to expandability and lifetime fuel storage. In addition, both were expected to require fairly extensive fuel element preparation and handling prior to final placement. Nevertheless, considering in particular expected system costs, it was considered that neither would represent ultimately an optimal storage solution and that exploration of fuel storage options not based on existing systems was warranted in that their expected higher design and development costs should be outweighed by lower construction and operational costs.

3.3.3 On-site Intermediate Storage Facility

A lot of work was related to the development of an on-site intermediate spent fuel storage system. This system receives irradiated fuel blocks from the reactor systems and stores them until they are shipped off-site. This system consists of a COSF, a FCF, an ACSF, a CLF, and a DCSF (optional). With the exception of the DCSF, all of these facilities are located in the reactor service building.

An alternative to an ACSF was a passively cooled facility that is independent of the reactor services building. This passively cooled alternative would have been a modular “add on” design that could be continuously expanded to provide long-term storage in lieu for instance of NUHOMS depending on economic and/or other considerations. However, with a passive cooling system, some additional lag storage (e.g., enlarge the COSF) to permit spent fuel thermal aging could have been required prior to transfer to such facility.

The general flow of materials through the on-site intermediate spent fuel storage system was as follows. Irradiated fuel elements are received from the reactor systems by way of the fuel transfer tunnel and are placed in either the COSF or the FCF. The fuel elements are sealed into FSCs in the FCF. At that point, the heat output of the FSCs might have been too great for them to be loaded into larger storage modules. In that case, the FSCs would have had to be stored in the ACSF until their heat output decreases sufficiently. When sufficiently cool, the FSCs could have been loaded into large-capacity canisters, which are licensed for both storage and transportation.

3.3.4 Cask systems

In the course of the ANTARES program, the design of the large-capacity canisters was actually based on that of existing NUHOMS® canisters for LWR fuel. The canisters would have provided containment and convenient handling of multiple FSCs but would not have been designed to provide shielding.

The large-capacity canister would have stored 114 fuel elements in a 19-cell array of fuel storage tubes. A 19-cell array appeared to be an optimal size for an ANTARES canister. Each fuel storage tube would have contained one FSC. A fully loaded canister was projected to have a mass of about 43,000 kg.

Two designs were considered for the large-capacity canister. One was a tube-and-disk design (Figure 3); the other was a honeycomb design (Figure 4). The honeycomb design might have been more efficient in that it might provide a tighter spacing between FSCs. On the other hand, with a tube and disc design it might be possible to eliminate the hexagonal storage cells and simply machine openings in the stacked fuel basket disks to accommodate the FSCs. Both designs would have included shield plugs at each end to provide shielding during later transfer operations.

If the irradiated fuel was to be stored on-site in a DCSF, the canister would have been placed into a transfer cask, the transfer cask and canister being placed in the high-radiation area of the CLF. In that design, the transfer cask was a thick-walled vessel designed to provide shielding during closure and transfer operations. The large-capacity canister is loaded with FSCs, the top shield plug is inserted, and the transfer cask and canister are moved to the low-radiation area of the CLF. The top covers are placed and welded to the canister. Finally, the transfer cask cover is bolted in place.

The DCSF would have included a number of concrete HSMs. Each HSM can store one large-capacity canister. An HSM is a box-like, prefabricated, heavy walled structure with a removable shielded portal in the front to permit horizontal loading of the canister (Figure 5). Following loading, the canister rests on rails located inside the module. The heavy reinforced concrete side walls and top provide biological shielding and protection against natural phenomena. The modules are vented at the top and bottom to permit removal of the decay heat generated by the spent nuclear fuel stored therein. The projected dimensions of an HSM were approximately 5 m high × 3.4 m wide × 6.1 m long.

A transfer cask for a large-capacity canister would range from 2.4 to 2.7 m in diameter depending on the thickness of the neutron and gamma shields and would be at least 5.2 m long. The transfer cask would be larger than comparable LWR transfer casks because the ANTARES canisters were larger than their LWR counterparts. However, the weight of a transfer cask loaded with a canister of 19 FSCs (hook weight) would have been about the same as some of its LWR counterparts because less gamma shielding was needed for ANTARES fuel, and because a LWR transfer cask contains water when it is removed from the fuel pool. The mass of an empty transfer cask would have ranged from 54 to 59 tons.

If the irradiated fuel was to be moved off-site immediately, without storage in a DCSF, the canister loading operations would have been similar, but the transfer cask would have been replaced by a transport cask. In consideration of the projected dimensions and weight of a loaded transport cask, transport would have been performed by rail. The mass of a loaded transport cask might have reached 115 tons or more with impact limiters.

4 Conclusions

The ANTARES waste management program dealt with irradiated graphite and spent fuel issues. In particular, resolution of the “graphite problem” was a pre-requisite to the acceptance of HTR technology by utilities and plant operators. Nevertheless, it was considered that the irradiated graphite from the operation of the ANTARES could have been readily managed within the spectrum of disposal options currently available, because the issue of irradiated graphite waste management was more of a perception than a technical issue, and would have not constrained development of the ANTARES. What's more separation of the fuel compacts from their graphite host blocks in a dedicated facility would have drastically reduced the volume of graphite that would require disposal as high level waste.

Thus options did or would have existed to store/dispose radioactive graphite wastes. These options would include surface burial, sub-surface burial, or deep geological emplacement depending on the requirements of the disposing nation. Regardless of its source (i.e., fuel blocks or reflector blocks), the irradiated graphite is similar and, at the time of the Project, the options for its management were limited to on-site storage, as evidenced by the large graphite stockpiles that do exist (e.g., in France, United Kingdom et al), or to direct disposal in a surface repository. Other than the public concern over the mounting quantities of irradiated graphite being stored at multiple reactor sites, storage of irradiated graphite has not been problematic in the US... But with limited space and strict controls on waste facility radioactivity limits, direct disposal was an option only if dedicated surface disposal or sub-surface disposal facilities become available.

Recycling could have also significantly reduced or could have even eliminated the need to treat irradiated graphite as a waste product. But each of the form of processing envisioned warranted further study by the end of the ANTARES Project. Rather, irradiated graphite, whether from new HTR or legacy graphite waste, could be considered a resource if suitable processing and fabrication programs could be developed and deployed.

ANTARES spent fuel management was similar to the U.S. experience with at-reactor spent fuel storage. There are a number of stand-alone dry spent fuel storage systems currently licensed in the U.S. for LWR spent fuel that could be modified for storage of the graphite spent

fuel blocks with compacts (or for the compacts themselves if removed from their graphite host blocks). During the pre-conceptual design phase, an at-reactor long-term storage was thus selected for the ANTARES spent fuel. A "near reactor" interim storage solution was adopted; direct hand-off of fuel elements from the reactor fuel handling system was a key feature of such a system. A close-packed storage array was preferred to reduce the size of the structure required for spent fuel storage, thus reducing the cost of the facility.

This report describes in particular the work done related to the design of on-site intermediate spent fuel storage facilities that meet all ANTARES plant requirements. Such systems for spent fuel blocks (with compacts) and/or replaceable blocks would be located either within the existing fuel building or auxiliary building, or immediately adjacent to one of these structures.

An assessment of spent fuel storage systems that were currently licensed in the U.S. for LWR fuel, including available cask systems, was performed to determine if they could be used for storing the ANTARES spent fuel. It was concluded that with certain modifications, several systems could be adapted for storing used ANTARES blocks (e.g. the Transnuclear NUHOMS® system). It was also concluded that a separate interim storage system should be included. Spent fuel would be aged in this system prior to transfer to NUHOMS® for longer term storage. One option was to include an actively cooled system within the reactor services building by extending the core offload storage area; another was to construct an independent passively cooled facility.

Nevertheless, due to the expected high cost of all these options, the design of new storage system concepts more pertinent for HTR spent fuel was suggested subsequently to the pre-conceptual design phase.

5 Figures & Tables

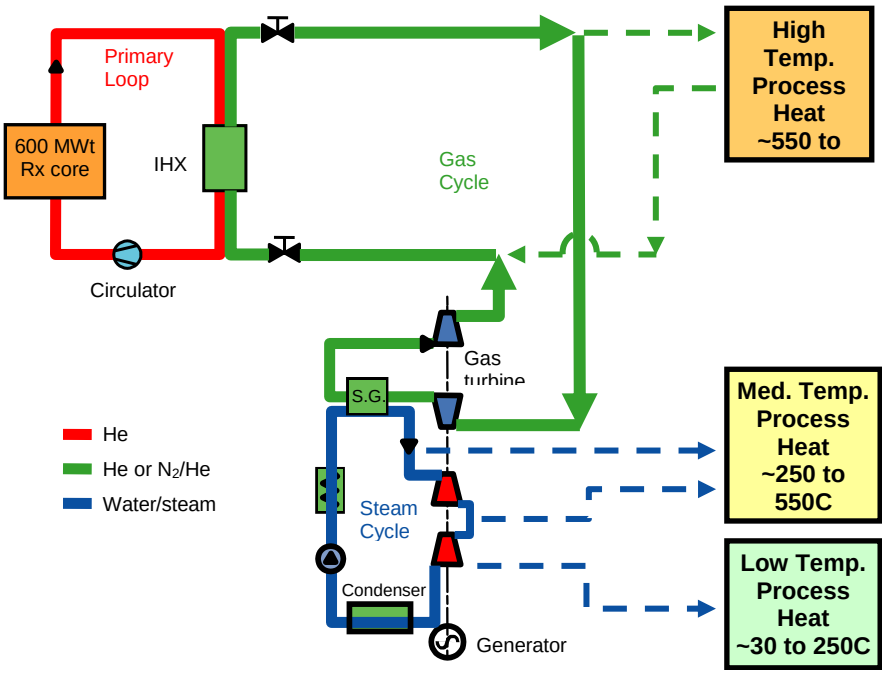

Figure 1: Reference ANTARES Configuration and Process Heat Options

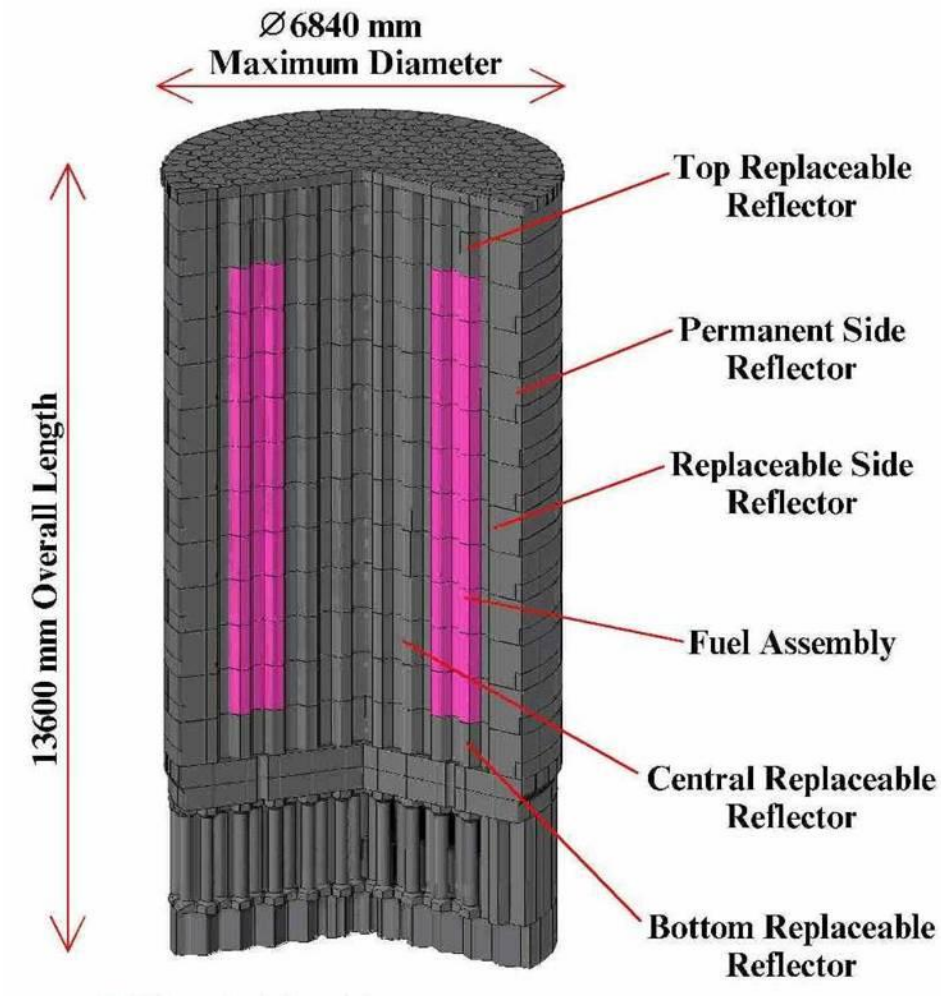

Figure 2: Reactor System

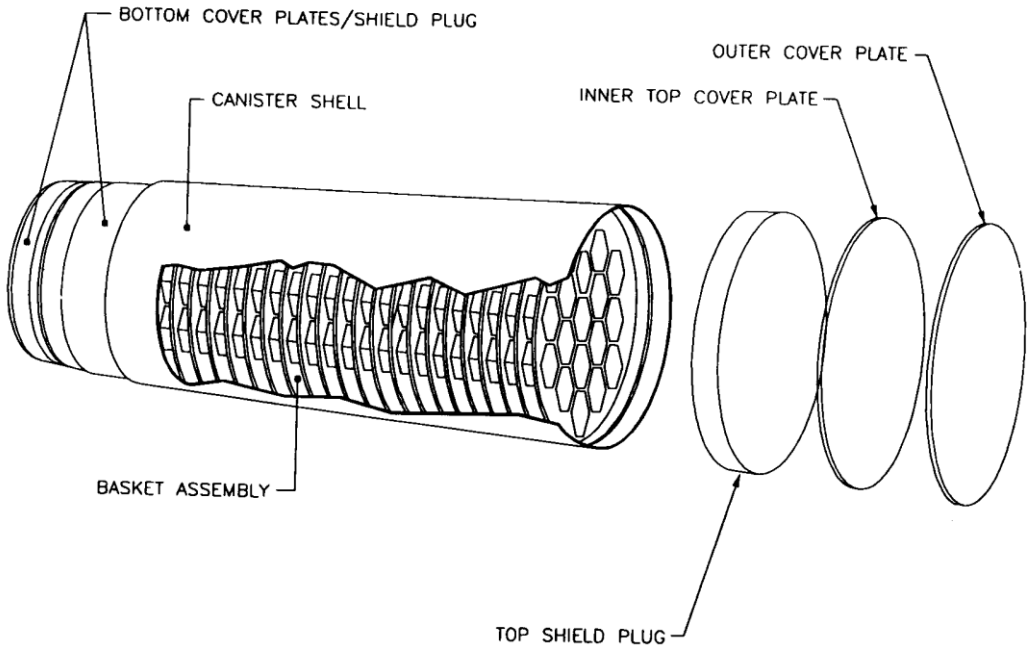

Figure 3: Tube-and-Disk Design for Large-Capacity Canister

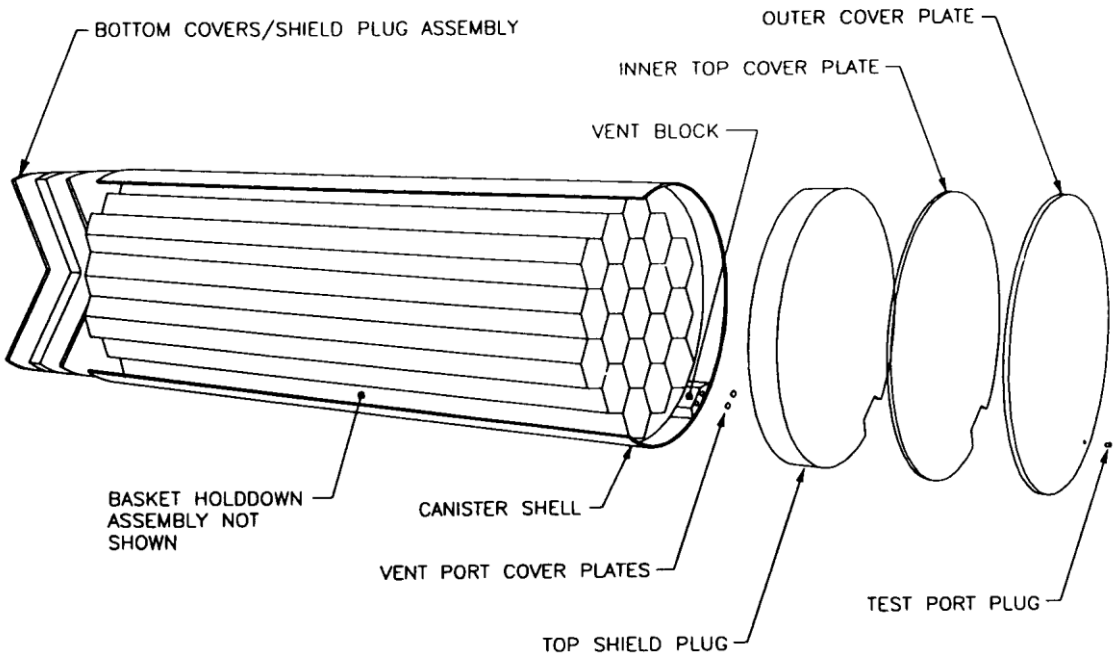

Figure 4: Honeycomb design for large-capacity canister

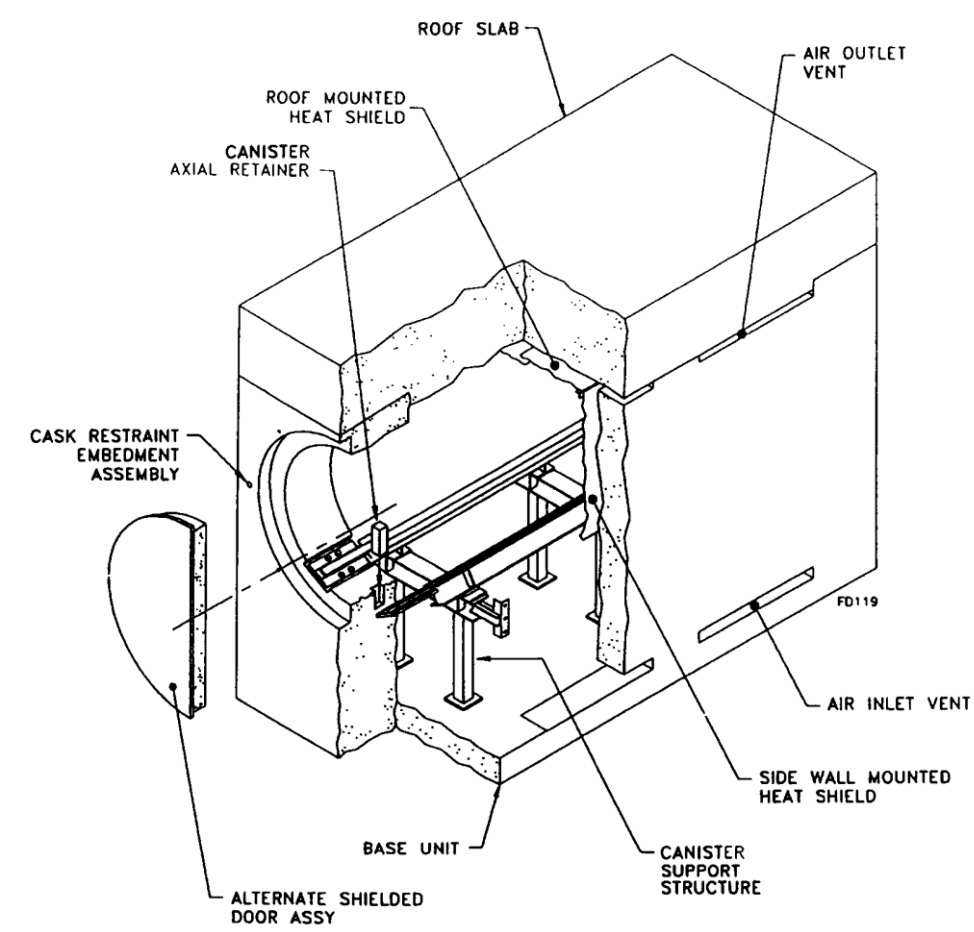

Figure 5 : Prefabricated Horizontal Storage Module

Fuel Type	**TRISO, prismatic block**
Core Geometry	102 column annular 10 block high
Reactor Power	600 MWth
Reactor Inlet Temperature	400°C
Reactor Outlet Temperature	850°C
IHX Secondary Outlet Temperature	800°C
Primary Pressure	6 MPa
Primary Coolant	Helium
Secondary Coolant	Nitrogen/Helium
Reactor Vessel	Mod 9Cr 1Mo
Power Generating System	CCGT – Gas turbine with bottoming cycle
Net Efficiency	>46%

Table 1: Reference ANTARES Parameters

Graphite Waste (Tons)

Reactor Component Graphite	Mass of Component	Replacement Period (yrs)	No of Times Replaced	Lifetime Discharge
Fuel Assemblies including compacts	116	3	20 (1)	2320
Inner/outer reflector + graphite above/below	353	6	10 (2)	3530
Permanent reflector	260	60	(3)	260
Total Graphite	729			6110

(1) Half of assemblies in first and last cores operate 18 months

(2) Includes 9 replacements plus the graphite remaining at license expiration

(3) Permanent reflector is not replaced; it is disposed of on decommissioning

Table 2: Irradiated Graphite Discharge Quantities for a 600 MWt HTR operated for 60 years

6 References

[1] ANTARES Pre-Conceptual Design Report, December 2006