EUROPEAN COMMISSION

Community Research

SEVENTH FRAMEWORK PROGRAMME

CARBOWASTE

Treatment and Disposal of Irradiated Graphite and Other Carbonaceous Waste

Grant Agreement Number: FP7-211333

Technical Report T-6.4.2
Report on model ^{14}C migration in gas phase in porous media

Authors: Alina Constantin, Daniela Diaconu, Crina Bucur

Reporting period: 01/04/2008– 31/03/2011

Date of issue of this report : 20/05/2011

Start date of project : **01/04/2008** Duration : **48 Months**

Project co-funded by the European Commission under the Seventh Framework Programme (2007 to 2011) of the European Atomic Energy Community (EURATOM) for nuclear research and training activities		
Dissemination Level		
PU	Public	
RE	Restricted to the partners of the CARBOWASTE project	**X**
CO	Confidential, only for specific distribution list defined on this document	

Distribution list

Person and organisation name and/or group	Comments
Werner von Lensa, FZJ	
Bernd Grambow, Subtech	
WP6 partners	
Executive Board	
European Commission	

CARBOWASTE		
Work package: 6 **Task: 6.4**	**CARBOWASTE document no:** CARBOWASTE-1104-T 6.4.2	**Document type:** T=Technical Report
Issued by: INR (RO) **Internal no.:** 9377/2011		**Document status:** Final

Document title

Report on model ^{14}C migration in gas phase in porous media

Executive summary

Tasks assumed by INR in the framework of the CARBOWASTE project, in WP6, include experimental studies on migration of 14C via gas pathway from carbonaceous waste, model of C-14 release, performance analyses for 14C and 36Cl based on the existing concept of the future LIL waste repository from the Saligny site. Designing, manufacturing and testing of an experimental device to assess unsaturated gas flow parameters have been performed during the first year of the project. This report presents results on (1) several experiments of gas flow – particularly CO_2 - in unsaturated media (e.g. compacted loess sampled from Saligny site and compacted bentonite most likely to be used in the cover system of the future LIL repository) in order to create real input data for a ^{14}C migration model and (2) implementation of a mathematical model for ^{14}C migration in both liquid and gas phase in GoldSim using input data previously determined.
The experiments and modeling at INR focused on a hypothetical release of ^{14}C as carbon dioxide, through diffusion in media pores and migration of the gas species through environment was accounted to take place through advection and diffusion. The results indicated primarily that gas advection component has far more contribution in the model than diffusion. However, the gas source term need reconsideration (gas released in the model only by diffusion).

Revisions

Rev.	Date	Short description	Authors	Internal Review	Task Leader	WP Leader
01	20/03/2011	Issue	Alina Constantin INR	Crina Bucur INR	Daniela Diaconu INR *Signature*	Grambow EMN

Table of Content

1 Generals 5
2 Experimental work on gas migration 6
2.1 Experimental set-up 7
2.2 Samples 9
2.2.1. Compacted loess 9
2.2.2 Compacted bentonite 9
2.3 Experimental data 10
3 Mathematical model of C-14 migration as CO_2 12
3.1 3.1. Modeling assumptions 12
3.2 Mathematical model of C-14 migration in the form of CO_2 14
3.3 Model implemented in GoldSim 16
4 Conclusions 18
5 References 18
6 List of Figures 19
7 List of Tables 19

1 Generals

Following the objectives of the INR concerning the CARBOWASTE WP6 namely:

- experimental studies on migration of 14C via gas pathway from carbonaceous waste,
- model of C-14 release,
- performance analyses for 14C and 36Cl based on the existing concept of the future LIL waste repository from the Saligny site,

the activities performed were:

- designing, manufacturing and testing of an experimental device to assess unsaturated gas flow parameters;
- carrying out of several experiments on gas flow in unsaturated soil, in order to create real input data for a ^{14}C migration model;
- implementation of a mathematical model for ^{14}C migration in both liquid and gas phase in GoldSim.

The final activities foreseen involve the model validation/calibration and establishing of a source term for MTR i-graphite based on the findings in the literature and those arisen from several studies performed during the project by other partners.

In the Romanian scenario, the most likely option for irradiated graphite is a *near surface disposal*. The factors that converge to this solution are (1) the low amount and low activity of i-graphite existing on the territory of the country (the expected amount is maximum 10 t with a total activity not exceeding $2 \cdot 10^{10}$ Bq), (2) the immediate need for a disposal facility to accomodate the i-graphite coming from the decomissioning of the VVSR research reactor in Bucharest and (3) a LLW repository is foreseen in the near future (year 2017), whereas a deep geological disposal facility is expected to be built only after 2050.

Moreover, the radionuclide inventory for the LLW repository estimated for 4 CANDU Units contains already large quantities of C-14, Cs-137 and Co-60 which will be only slowly increased by the irradiated graphite disposal. Having this perspective, one of the INR goals in the CARBOWASTE project was to complete the performance assessment for ^{14}C with data accounting for irradiated graphite. ^{14}C could be transported to the biosphere either as a gas

(carbon dioxide or methane) or by groundwater (aqueous carbonate and bicarbonate, dissolved amorphous ^{14}C).

During transport and in the operational phase, gas production is likely to be of greatest radiological significance for those wastes having a high concentration of ^{14}C and that have the potential to degrade rapidly via oxidation or microbiological activity. An important but not fully elucidated consideration concerning this issue is whether this radionuclide, in certain conditions, will be produced and transported mainly as carbon dioxide or methane, as the radiotoxicological properties and environmental behaviour of these two species are completly distinct [1].

Under 'safe storage' conditions in a near surface disposal facility, negligible ^{14}C release through gas-phase mechanism is expected from i-graphite, as a temperature of more than 400°C is needed to produce a significant oxidation rate in air for graphite [2]. Neither bacteriological study has indicated a potential significant leaching of ^{14}C activity in these conditions [2].

Up to now, the experiments and modeling at INR related to performance assessment of i-graphite focused on a theoretical release of ^{14}C as carbon dioxide, through diffusion in media pores.

Samples used in flow tests were collected from the materials – clay and loess – making the cover system of the future Saligny repository. Data gained from the experimental work (e.g. flow rates throgh media and gas permeability of the media) consist a more realistic input for the mathematical model of ^{14}C transport.

Migration of the gas species through environment was accounted to take place through advection and diffusion.

2 Experimental work on gas migration

Experimental work on gas migration consisted of:

(1) designing, manufacturing and testing of an experimental device to assess unsaturated gas flow parameters (i.e. flow rate and gas permeability) and

(2) carrying out of several flow tests, using both inert gas (argon) and reactive gas (carbon dioxide), on samples of compacted clay and loess with different moisture contents and

under several pressure gradients, in order to create realistic input data for a ^{14}C migration model.

Argon was used in order to assess a potential reactive component of gaseous ^{14}C in these media, but no significant difference in the behavior of the two gases occurred. However, under the same conditions, a slightly decrease in carbon dioxide flow was observed, due most probably to the dissolution of this species in pore water.

2.1 Experimental set-up

The experimental set up for the measurement of gas permeability in unsaturated soil samples - designed and manufactured under the WP6 - consists in (Figure 1):

- sample holder (inner diameter = 40mm, 80 mm length)
- connecting tubes
- teflon tube (inner diameter = 4 mm)
- 3 way valve
- gas tank
- graded cylinder
- pressure reduction system

A picture of this experimental set-up is presented in the Figure 2

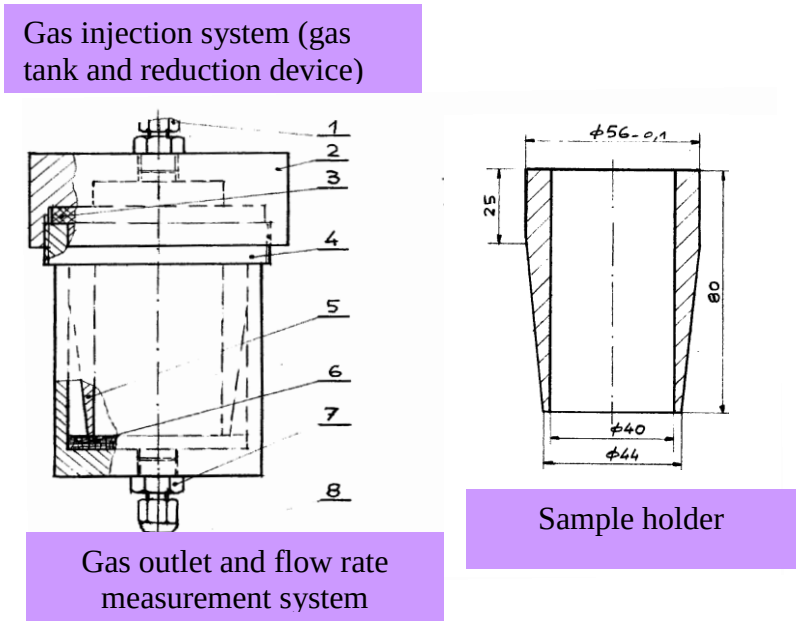

Figure 1. Scheme of the experimental set-up for gas migration in unsaturated soil samples

Figure 2. Experimental assembly for gas migration in unsaturated soil samples

The gas permeability can be calculated according to the following relationship derived from Darcy flow law:

$$K_{gas} = \frac{\Delta V_{gas} \cdot \eta_g}{S \cdot t \cdot \left(\frac{\Delta p}{l} - \rho_{gas} g \right)} \quad (1)$$

where:

$\frac{\Delta V_{gas}}{S \cdot t}$ - gas flow rate, K_{gas} - permeability, η - gas viscosity, ρ – gas density in normal conditions, and $\frac{\Delta p}{l}$ - pressure gradient.

The gas flow rate is determined based on the volume variation at constant pressure maintained at the atmospheric pressure. The permeability range covered by this experimental set-up is 10^{-15} - 10^{-12} m^2 with a measurement error less than 10%.

The experiments used samples of compacted loess from the Saligny site and compacted bentonite (as clay) that could be used in the cover system of the near-surface disposal. The tests were performed for different moisture contents and under different pressure gradients. Two gases, argon and carbon dioxide respectively, were used in order to establish the flow parameters – flow rate and permeability – in unsaturated media.

2.2 Samples

2.2.1. Compacted loess

The loess samples investigated were compacted at dry densities between 1.5 - 1.7 g/cm^3 in order to achieve a realistic density of the material in the near surface disposal cover system. Total porosity of the samples ranges between 0.38 – 0.4.

The gravimetric water content for optimum compaction was 17% g/g and corresponds to a water saturation degree of 0.71. When naturally dried (connecting the sample with the atmosphere through the 3-way valve), the minimum water content of the loess material was 3.85% g/g, corresponding to a saturation of 0.16.

A computer simulation performed with the HYDRUS software regarding the steady state flow field indicated a value of 0.3 for saturation in the loess layer (Figure 3).

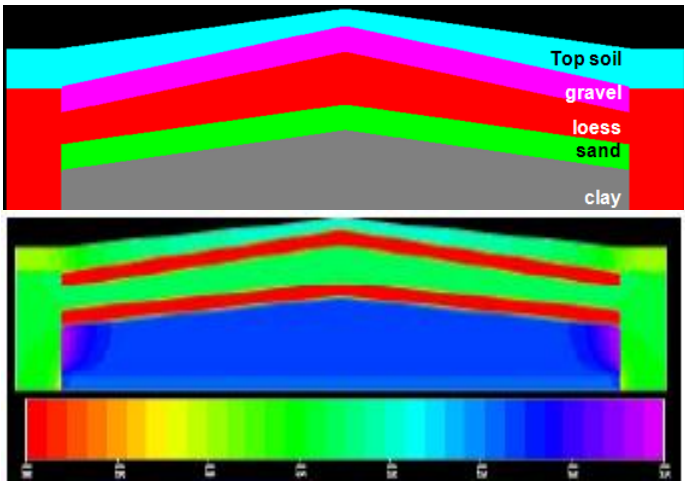

Figure 3. Cover system structure (up) and water content distribution (down)

Flow tests were thus run using samples with saturation degree of 0.7, 0.3 and respectively 0.16. The gas permeability determined was in 10^{-13} m^2 order of magnitude and the flow rate varied from order of 10^{-3} m/s (S_w=0.71) to 10^{-2} m/s (for saturations between 0.16 and 0.3). The differential pressure applied on samples varied between 0.2 – 0.4 bar.

2.2.2 Compacted bentonite

The clay samples (bentonite) were compacted at a dry density of 1.4 g/cm^3 and tests were performed for saturation degree of 0.8 as the HYDRUS simulation shown this value for clay

layer in steady state conditions. Initially the water content was not uniform distributed in the bentonite sample and open porosity was accessible for gas migration. Even so, a differential pressure of 4 bars was needed in order to allow gas breakthrough. Subsequent tests allowed gas flow at lower entry pressures (2 bars). The gas flow rate measured was 10^{-5} m/s while the derived permeability maintains in the order of magnitude of 10^{-16} m^2. After gas flow tests, water content in the bentonite sample was found redistributed. At the gas entry side the water content was 19 %g/g while at the opposite face of the sample the water content was 22% g/g.

2.3 Experimental data

Experimental data on loess samples are summarized in Table 1, whereas Table 2 contains output from clay tests.

Table 1. CO_2 gas flow and permeability for loess layer at different water saturation degrees under several differential pressures

Saturation	ΔP (bar)	Gas permeability (m^2)	Average permeability (m^2)	Gas flow rate (m/s)	Average flow rate (m/s)
0.71	0.20	8.29E-14	**9.17E-14**	1.46E-03	**2.03E-03**
	0.25	9.59E-14		2.11E-03	
	0.30	9.51E-14		2.51E-03	
0.30	0.20	2.83E-13	**3.56E-13**	4.98E-03	**8.01E-03**
	0.25	3.78E-13		8.31E-03	
	0.30	4.08E-13		1.07E-02	
0.16	0.20	3.52E-13	**5.26E-13**	6.19E-03	**1.05E-02**
	0.25	5.16E-13		1.13E-02	
	0.30	5.34E-13		1.41E-02	

The diagrams in Figure 4 correlate the average permeability and average flow rate with the saturation degree.

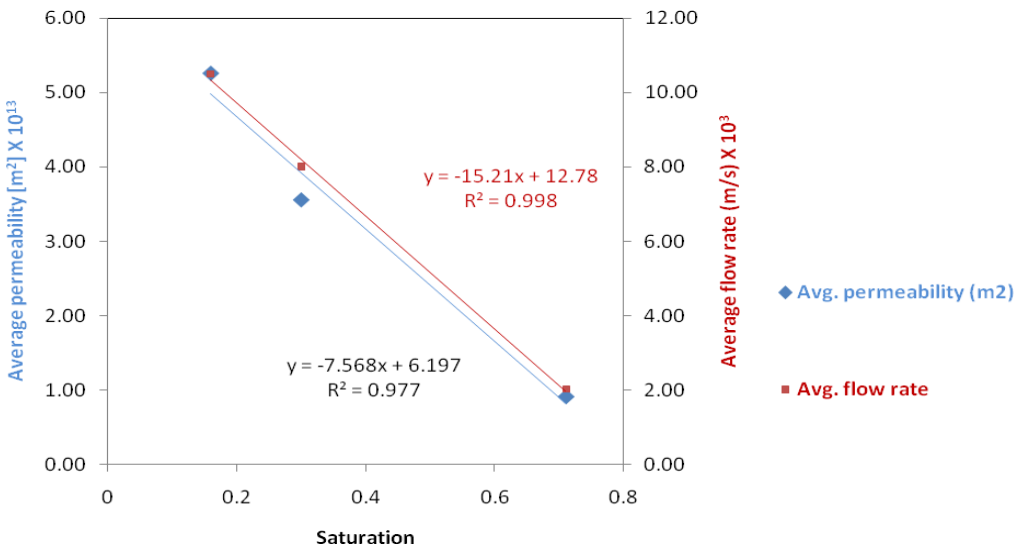

Figure 4. Permeability and average flow rate as function of water saturation in compacted loess

Table 2. Ar and CO_2 gas flow and permeability for compacted bentonite

Saturation	ΔP (bar)	Gas permeability (m^2)	Average permeability (m^2)	Gas flow rate (m/s)	Average flow rate (m/s)
Ar					
0.7	3.0	2.20E-17	3.93E-17	3.98E-06	8.03E-06
	3.1	2.85E-17		5.32E-06	
	3.25	3.29E-17		6.43E-06	
	3.4	2.78E-17		5.69E-06	
	3.5	5.66E-17		1.19E-05	
	3.6	6.77E-17		1.48E-05	
CO_2					
0.7	1	1.09E-17	1.56E-17	9.05E-07	2.08E-06
	1.5	1.35E-17		1.68E-06	
	2	2.24E-17		3.65E-06	

At the end of the gas flow measurements, porosity distribution of the compacted loess and bentonite were determined by mercury porosimetry **(**Figure 5**).** The open porosity of the compacted loess was 0.13 cm^3/g and corresponds to an effective porosity for the gas phase of 22%. It consists in the pores ranging between 0.05 and 6 µm in diameter, with a log-normal distribution and an average radius of 1.5 µm.

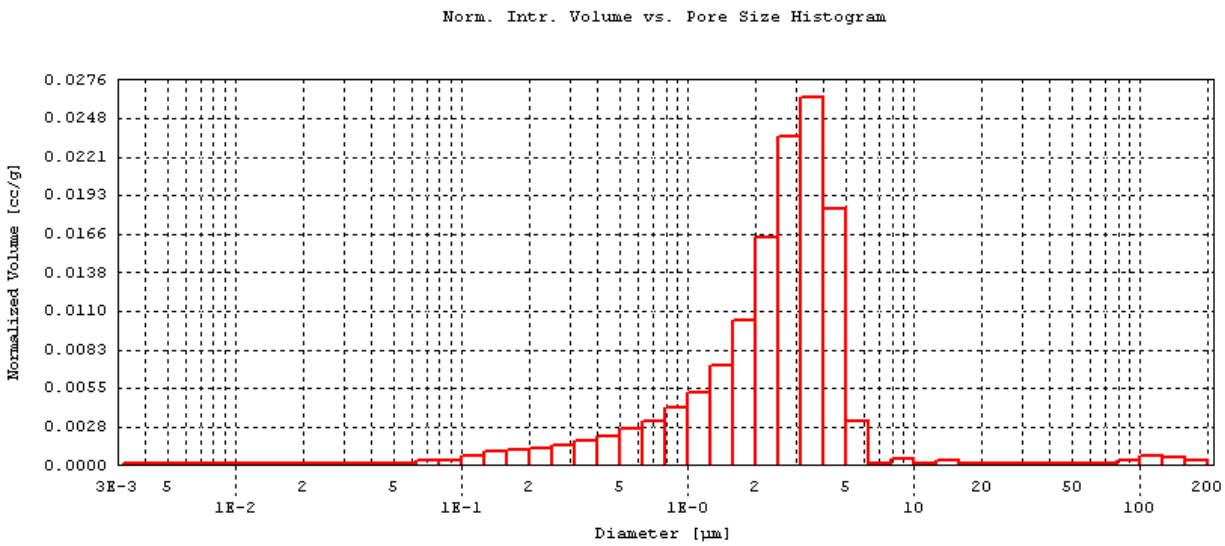

Figure 5. Pore size distribution in compacted loess sample

Using parameters defining the open pore structure (effective porosity, pore size, distribution function) gas permeability was estimated as function on the saturation degree and compared to the experimental values.

Assuming open pores as cilindrical tubes with the radius r and fluid flows through the pores according to the Poisseuille law, for a isotropic environment, the permeability to gas in steady state conditions could be witten as:

$$\kappa = \frac{p}{6}\sum_{i=1}^{n} f_i \cdot r_i^2 \qquad (2)$$

where r_i - pore radius, f_i - distribution function and p – effective porosity.

For the compacted loess sample, the estimation of (2) for a water saturation degree of 70% gives a gas permeability of 8.25 E-14m^2, in good agreement with the measured data.

3 Mathematical model of C-14 migration as CO_2

3.1 3.1. Modeling assumptions

The major speciation of ^{14}C that can be released from a LLW repository and in particular from waste containing irradiated graphite are: carbon dioxide ($^{14}CO_2$), methane ($^{14}CH_4$) as gaseous

forms and carbonate ($^{14}CO_3^{2-}$), bicarbonate ($H^{14}CO_3^-$) and elemental carbon in aqueous solution.

Unlike many other radionuclides, ^{14}C (e.g., as carbon dioxide or the bicarbonate ion) can be highly mobile in many geological environments and its mobility is strongly correlated with the media through its complex aspects such as chemistry and hydrogeology.

pH is one of the key variables that largely control the speciation and mobility of carbon in aqueous environments and the general major element chemistry of the pore water may also play important role in controlling the ^{14}C mobility within the media. The amount of ^{14}C that will be released will be also highly dependent on the flow regime in which the wastes reside.

^{14}C in gaseous form is not likely to evolve from graphite waste destined to be disposed at the future Saligny LLW repository. However, biodegradation of organic waste could play an important role in releasing of ^{14}C contaminated gases. Gas phase ^{14}C may be available for release at rates greater than would normally be experienced through the liquid (groundwater) pathway [3]. At the same time, if significant amounts of gaseous ^{14}C activity are released through the air pathway, this will deplete the inventory of ^{14}C available for release through the groundwater pathway.

Another key aspect of the ^{14}C gaseous release in the form of CO_2 is whether, once escaping the cementitous barrier of the vaults and repository – which is in fact not likely to happen at the amount expected to occur at Saligny - it is trapped in the pore water or it travells through media by diffusion in pores and finally escapes into the atmosphere.

A quick calculation can provide a rough estimate on the amount of CO_2 in equilibrium with the estimated upper limit of dissolved carbonate (CO_3^{2-} concentration of 0.18 mg/L), in a system with pH = 11 and a temperature of 15°C.

Considering the following reactions occuring in solution regarding the carbon species:

$$CO_2(gas) + H_2O \Leftrightarrow H_2CO_3 \qquad K_0 = \frac{[H_2CO_3]}{P(CO_2)[H_2O]} = 10^{-1.26} \tag{3}$$

$$H_2CO_3 \Leftrightarrow H^+ + HCO_3^- \qquad K_1 = \frac{[H^+][HCO_3^-]}{[H_2CO_3]} = 10^{-6.47} \tag{4}$$

$$HCO_3^- \Leftrightarrow H^+ + CO_3^{2-} \qquad K_2 = \frac{[H^+][CO_3^{2-}]}{[HCO_3^-]} = 10^{-10.49} \tag{5}$$

the partial pressure of CO_2 obtained is:

$$P(CO_2) = \frac{[H_2CO_3]}{K_0} = \frac{[H^+]^2[CO_3^{2-}]}{K_0K_1K_2} \tag{6}$$

which for values below is $7.1 \cdot 10^{-10}$ atm = $3.03 \cdot 10^{-5}$ mole/m^3 = $1.33 \cdot 10^{-3}$ g/m^3.

3.2 Mathematical model of C-14 migration in the form of CO_2

It can be assumed that the CO_2 transport in the unsaturated zone can occur in both liquid and gas phases. Two transport mechanisms, convective/advective transport and diffusive transport in both gas and aqueous phases, as well as CO_2 production and/or removal govern the CO_2 concentration in soil. The 1D CO_2 transport is described by the following mass balance equation [4]:

$$\frac{\partial c_T}{\partial t} = -\frac{\partial}{\partial z}\left(J_{dg} + J_{dw} + J_{cg} + J_{cw}\right) + R \tag{7}$$

where:

J_{dg} describes the CO_2 flux caused by diffusion in the gas phase [LT^{-1}]

J_{dw} describes the CO_2 flux caused by dispersion in the dissolved phase [LT^{-1}]

J_{cg} describes the CO_2 flux caused by convection in the gas phase [LT^{-1}]

J_{cw} describes the CO_2 flux caused by convection in the dissolved phase [LT^{-1}]

c_T is the total volumetric concentration of CO_2 [L^3·L^{-3}]

R accounts for the chemistry of CO_2 [L^{3}L^{-3}T^{-1}]

The individual terms in equation above can be defined as:

$$J_{dg} = -\theta_g D_g \frac{\partial c_g}{\partial z} \tag{8}$$

$$J_{dw} = -\theta_w D_w \frac{\partial c_w}{\partial z} \tag{9}$$

$$J_{cg} = -q_g c_g \tag{10}$$

$$J_{cw} = -q_w c_w \tag{11}$$

where:

c_w and c_g are the volumetric concentrations of CO_2 in the dissolved phase and gas phase [L^3L^{-3}],

D_g is the effective soil matrix diffusion coefficient of CO_2 in the gas phase [L^2T^{-1}],

D_w is the effective soil matrix dispersion coefficient of CO_2 in the dissolved phase [L^2T^{-1}]

q_g is the soil gas flux [LT^{-1}]

q_w is the soil water flux [LT^{-1}]

θ_g is the volumetric gas content [L^3L^{-3}].

The total CO_2 concentration, c_T [L^3L^{-3}], is defined as the sum of CO_2 in the gas and dissolved phases:

$$c_T = c_g\theta_g + c_w\theta_w \tag{12}$$

After substituting (8) and (9) into (7) we obtain:

$$\frac{\partial(c_g\theta_g + c_w\theta_w)}{\partial t} = \frac{\partial}{\partial z}\theta_g D_g \frac{\partial c_g}{\partial z} + \frac{\partial}{\partial z}\theta_w D_w \frac{\partial c_w}{\partial z} - \frac{\partial}{\partial z} q_g c_g - \frac{\partial}{\partial z} q_w c_w + R \tag{13}$$

The total aqueous phase CO_2, c_w is defined as the sum of CO_2(aq) and H_2CO_3 and is related to the CO_2 concentration in the gas phase by:

$$c_w = K_{CO_2} RTc_g \tag{14}$$

where K_{CO_2} is the Henry's Law constant [$MT^2M^{-1}L^{-2}$], R is the universal gas constant (8.314 $kg \cdot m^{2} \cdot s^{-2} \cdot K^{-1} \cdot mol^{-1}$) [$ML^2T^{-2}K^{-1}M^{-1}$] and T is the absolute temperature [K].

The interaction of dissolved CO_2 with the solid phase is not considered at this time such as $R = 0$.

Substituting equation (11) into (10) gives:

$$\frac{\partial R_f c_g}{\partial t} = \frac{\partial}{\partial z} D_E \frac{\partial c_g}{\partial z} - \frac{\partial}{\partial z} q_E c_g \tag{15}$$

where:

R_f is the CO_2 retardation factor [-],

D_E is the effective dispersion coefficient for the CO_2 in the soil matrix [L^2T^{-1}]

q_E is the effective velocity of CO_2 [LT^{-1}]

θ_g is the volumetric gas content [L^3L^{-3}]

These parameters are defined as:

$$R_f = \theta_g + K_{CO_2} RT\theta_w \quad (16)$$

$$D_E = \theta_g D_g + K_{CO_2} RT\theta_w D_w \quad (17)$$

$$q_E = q_g + K_{CO_2} RTq_w \quad (18)$$

$$\theta_g = p - \theta_w \quad (19)$$

3.3 Model implemented in GoldSim

The mathematical model described above was implemented in GoldSim considering an instantaneous release of gaseous CO_2 from waste by diffusion. However, it should be noted that this assumption is highly conservative and a more realistic approach should be further taken into consideration.

The CO_2 transport in gas phase was included in the existing model of the Saligny LIL waste disposal (Figure 6).

The gas transport model considered the two media for which experimental data were available: bentonite and loess with the following input (Table 3):

Table 3. Input data for the GoldSim model

	Loess	**Bentonite**
Dry bulk density	1.5 g/cc	1.4 g/cc
Porosity	0.4	0.45
Water saturation	0.3	0.8
Layer thickness	1.5 m	3.5 m
Pressure gradient through layer	42857 Pa/m	42857 Pa/m
Gas permeability	$3 \cdot 10^{-13}$ m^2	$1.5 \cdot 10^{-17}$ m^2
Gas flow through layer	$1.55 \cdot 10^{-2}$ m/s	$1.8 \cdot 10^{-5}$ m/s
K_d (carbonate)	0.5 l/kg	0.72 l/kg
Water dispersion coefficient	$6 \cdot 10^{-11}$ m^2/s	$4 \cdot 10^{-11}$ m^2/s

The results indicated primarily that gas advection component has far more contribution in the model than diffusion (Figure 7). However, the gas source term need reconsideration (gas released in the model only by diffusion)

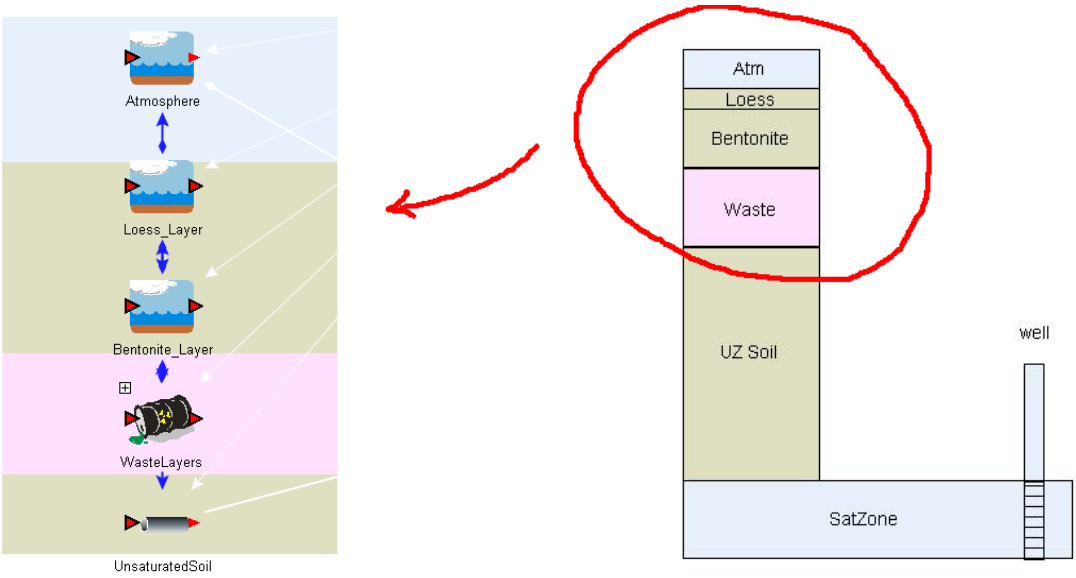

Figure 6. Schematic representation of the GoldSim model

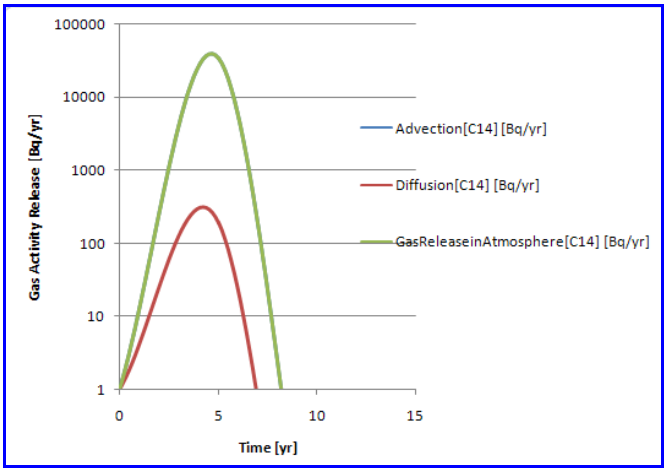

Figure 7. GoldSim output for the CO_2 transport model

4 Conclusions

1. The experimental data on gas transport through unsaturated porous media confirmed that gas flow is governed by Darcy law.
2. C-14 migration in gas phase was investigated using CO_2. Its permeability and flow rate in compacted loess samples depend on the saturation degrees and range between 9.17 10^{-14} and 5.26 10^{-13} m^2, respectively 2.03 10^{-3} ÷1.02 10^{-2} m/s, when water saturation decreased from 0.7 to 0.16.
3. CO_2 flow in compacted bentonite with water saturation of 0.7 occurred at high gas pressures and only as long as the initial open porosity closes due to the water redistribution.
4. Compared to an inert gas (Ar), a slightly decrease in carbon dioxide flow due most probably to the dissolution of this species in pore water was observed.
5. Flow parameters for C-14 gas were used in GoldSim model of the cover system of a near-surface repository based on the Saligny LIL repository design.

5 References

[1] EPRI – Carbon-14 in Low-Level Waste, TR-1079597, September 1994

[2] EPRI – Graphite Decomissioning, Options for Graphite Treatment, Recycling or Disposal, including discussion of Safety Related Issues, TR – 1013091, March 2006

[3] Yim, M.S; Caron,F. – Life cycle and management of carbon -14 from nuclear power generation, Review, progess in Nuclear Energy 48 (2006), 2-36

[4] US Salinity Laboratory – The UUNSATCHEM Software Package for Simulating the 1D Variably Saturated Water Flow, Heat Transport, Carbon Dioxide Production and Transport and Multicomponent Soluble Transport with Major Ion Equilibrium and Kinetic Chemistry, Version 2, Research Report No. 141, November 1996.

6 List of Figures

Figure 1. Scheme of the experimental set-up for gas migration in unsaturated soil samples..... 7
Figure 2. Experimental assembly for gas migration in unsaturated soil samples..... 8
Figure 3. Cover system structure (up) and water content distribution (down) 9
Figure 4. Permeability and average flow rate as function of water saturation 11
Figure 5. Pore size distribution in compacted loess sample 12
Figure 6. Schematic representation of the GoldSim model 17
Figure 7. GoldSim output for the CO_2 transport model..... 17

7 List of Tables

Table 1. CO_2 gas flow and permeability for loess layer at different water saturation degrees under several differential pressures 10
Table 2. Ar and CO_2 gas flow and permeability for compacted bentonite 11
Table 3. Input data for the GoldSim model 16