FORGE

Fate Of Repository Gases

European Commission FP7

Description of laboratory and in-situ experiments

FORGE Report D4.1 and D4.2 – VER.0

	Name	Organisation	Signature	Date
Compiled	Jon Harrington	BGS	Jon Harrington	23 March 2010
Verified	Richard Shaw	BGS		21 April 2010
Approved	Richard Shaw	BGS		21 April 2010

Euratom 7th Framework Programme Project: FORGE

EURATOM

Fate of repository gases (FORGE)

The multiple barrier concept is the cornerstone of all proposed schemes for underground disposal of radioactive wastes. The concept invokes a series of barriers, both engineered and natural, between the waste and the surface. Achieving this concept is the primary objective of all disposal programmes, from site appraisal and characterisation to repository design and construction. However, the performance of the repository as a whole (waste, buffer, engineering disturbed zone, host rock), and in particular its gas transport properties, are still poorly understood. Issues still to be adequately examined that relate to understanding basic processes include: dilational versus visco-capillary flow mechanisms; long-term integrity of seals, in particular gas flow along contacts; role of the EDZ as a conduit for preferential flow; laboratory to field up-scaling. Understanding gas generation and migration is thus vital in the quantitative assessment of repositories and is the focus of the research in this integrated, multi-disciplinary project. The FORGE project is a pan-European project with links to international radioactive waste management organisations, regulators and academia, specifically designed to tackle the key research issues associated with the generation and movement of repository gasses. Of particular importance are the long-term performance of bentonite buffers, plastic clays, indurated mudrocks and crystalline formations. Further experimental data are required to reduce uncertainty relating to the quantitative treatment of gas in performance assessment. FORGE will address these issues through a series of laboratory and field-scale experiments, including the development of new methods for up-scaling allowing the optimisation of concepts through detailed scenario analysis. The FORGE partners are committed to training and CPD through a broad portfolio of training opportunities and initiatives which form a significant part of the project.

Further details on the FORGE project and its outcomes can be accessed at www.FORGEproject.org.

Editor: J.F. Harrington (BGS)

1 Introduction

This report describes the experimental set-ups for both laboratory and field scale experiments with WP4. Forge participants were asked to complete a detailed pro-forma the results of which are presented in the following pages of this document, fulfilling deliverables D4.1 and D4.2.

2 Completed pro-fromas

Experimental Systems and Planned Activities

Organisation
British Geological Survey
Work package
WP 4.1.1 Effect of stress field and mechanical deformation on permeability and fracture self-sealing
Description of planned research
The objective of the experimental programme is to examine the impact of changing effective stress (e.g. caused by the construction of a disposal/storage facility) and to investigate its affects on the sealing characteristics of the argillite. As such, there is a need to understand the roles of the stress tensor, the stress path and associated mechanical deformation in determining permeability changes affecting the sealing efficiency of the argillite. Under certain stress conditions, mudrock deformation will result in dilation (net volume increase) or contraction (net volume decrease). The boundary between these conditions is referred to as the dilatancy boundary and this plots as a point in the mean stress (p) versus deviatoric stress (q) space, or a line when specific volume (v) is used as a third axis. Critical state mechanics shows that complex deformation can be described by a series of yield surfaces in the p' – q' - v parametric space. Calibration of this model can be undertaken by taking samples of mudrock along predefined stress paths extending to the yield surfaces while measuring the resulting changes in permeability (both aqueous and gaseous). The main output of the research will be to enhance process understating in EDZ mudrock environments, through the critical examination and subsequent validity of key geomechanical relationships applied to mudrock deformation and its role in the temporal evolution of permeability during the operational and post closure repository phases.

This project will build on and compliment ongoing experimental work at the BGS in order to provide insights into process understanding and to increase confidence (through the reduction of uncertainty) by the acquisition of high-quality test data. The primary purpose of this experimental study is to provide quantitative data examining the mechanisms governing gas migration and the evolution of permeability. The primary objectives of this experimental study are to measure the evolution of permeability (both hydraulic and gas) of the Callovo-Oxfordian argillite subject to complex changes in stress and porewater pressure. Each stress path will be conducted twice; once with water and once with gas as the permeant, in order to gain insight into the fundamental processes governing fluid flow in the Callovo-Oxfordian Clay along complex stress paths.

Experimental set-up

The stress-path permeameter (SPP) is an evolution of the elastimeter apparatus that has been shown to perform well. The SPP comprises 6 main components (Figure 1):

1) The specimen, surrounded by a flexible Hoek sleeve and main pressure vessel body.
2) Three dash pots that are mounted along the radial mid-plane of the sample which directly measure the radial strain of the sample. The dash pots are pressure balanced in order to reduce the force imposed upon the sample and to make sure the push-rods are not simply pushed out of the pressure vessel.
3) An axial load system comprising of an Enerpac single acting hydraulic ram pressurised by an ISCO-500 series D syringe pump. This is connected via an axial strain jig to a Global Digital Systems optical encoder for measuring linear displacement accurate to 0.003 mm. Miniture load cells are located at the piston ends to measure stress at the sample ends.
4) A confining pressure system using an ISCO-500 series D syringe pump allowing radial strain measurements to be calculated through volume change.
5) A pore pressure system comprising two ISCO-100 series D syringe pumps to create pore fluid pressure and monitor back pressure.
6) A state-of-the-art custom designed data acquisition system facilitating the remote monitoring and control of all experimental parameters.

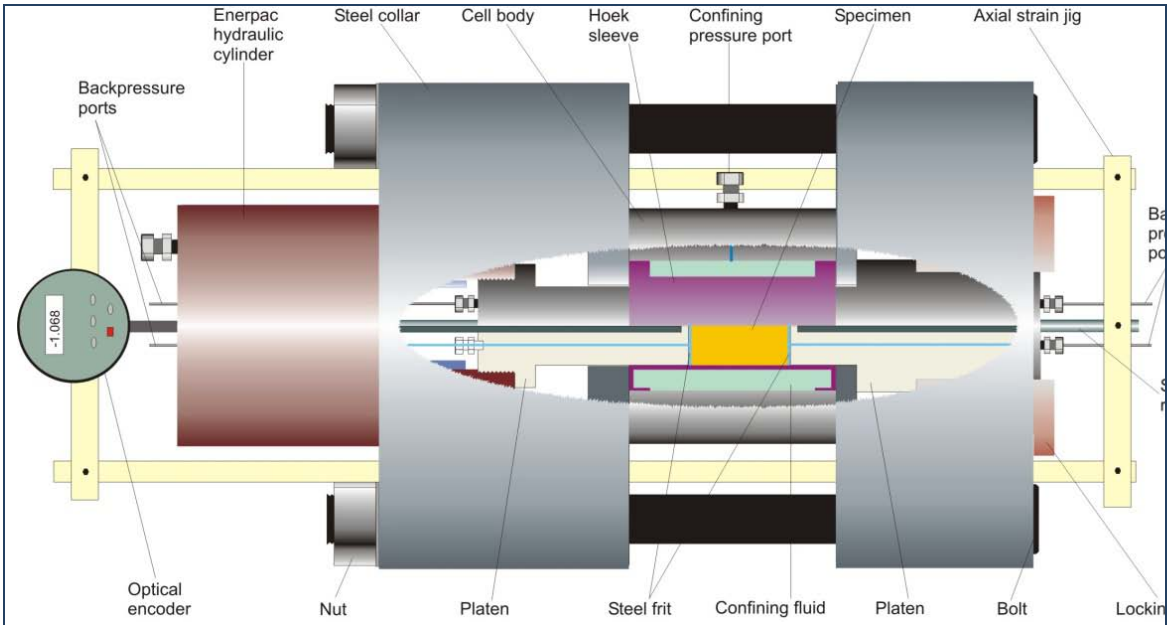

Figure 1: The stress-path permeameter experimental apparatus

A cylindrical rock specimen is positioned between two stainless steel platens and jacketed in a flexible Hoek sleeve to exclude the confining fluid (Figure 1). The inlet and outlet zones for water flow to and from the specimen are provided by stainless-steel discs, nominally 55.5 mm in diameter and 2-3 mm thick. Guard rings are located on the outer diameter of the platens, allowing pore pressure to be measured in two locations along the faces of the sample.

The load platens are in direct contact with the sample transmitting the axial force generated by the Enerpac ram directly to the specimen. Each platen has two ports facilitating flushing of the system and the removal of residual air prior to testing. Retaining collars and axial tie-rods lock the system components together to provide a rigid test rig.

Axial displacement is measured using the GDS optical encoder connected to stainless steel push rods terminating a short distance behind the load-bearing face of each platen to minimise compliance effects. Data from the optical encoder is processed through a multiplexer to provide a continuous measure of axial strain. The confining system provides an indirect measurement of radial strain by monitoring changes in volume while porewater displacement is monitored via the backpressure system.

Three pressure balanced dash-pots are located around the radial mid-plane of the specimen. Brass push-rods are in direct contact with the outer diameter of the Hoek sleeve. Three 10 × 10 mm brass plates are cemented to the outer edge of the Hoek sleeve in order to reduce the force the push-rods impose on the sample surface. The push rods extend to the outside of the pressure vessel, where high precision LVDTs are used to measure the displacement of the sample diameter.

Boundary conditions

The experiment will be conducted with a control on axial load, confining pressure and pore pressure. The resultant strains will be monitored on the platen ends and at three locations around the sample centre. The sample is able to undergo volumetric deformation and is only constrained by a pore fluid.

The experiment will follow given stress paths. A series of steps will be conducted to approximate the paths. Transition between steps will be conducted slowly and will take the order of a few days. Stress conditions will then be held constant for several weeks in order to achieve steady flow conditions.

Measured parameters

The following parameters are directly measured:

- SPP injection circuit pump (pressure, flow and volume)
- SPP back-pressure circuit pump (pressure, flow and volume)
- SPP axial load pump (pressure, flow and volume)
- SPP confining pressure pump (pressure, flow and volume)
- Load cell on the injection platen
- Load cell on the back-pressure platen
- Radial displacement of the sample mid-plane (Radial 1, Radial 2 & Radial 3)
- Axial displacement of the sample
- Temperature (vessel, laboratory low level and laboratory high level)

From the measured parameters, the following calculated parameters can be determined:

- Axial strain of the sample
- Radial strain of the sample
- Volumetric strain of the sample
    - From direct measurements on the sample
    - From displacement of confining fluid
- Permeability and storage capacity
- Stress state

Test programme

Six laboratory experiments will be undertaken as part of this study to examine the evolution of aqueous and gaseous permeability in response to changes in effective stress. Specific details of individual test programmes cannot be described within this document due to the evolutionary nature of the research and the need for a flexible experimental programme to be able to adapt to nascent results. However, a general outline of activities is provided below for guidance, though test stages may be added or deleted depending on previous results. It should also be noted that the duration of particular tests is an unknown and may result in the deletion of specific tasks. As such, tests will be performed in the order they are listed.

Stress path 1 - dry side deformation with no porewater pressure

The first two tests will be conducted without porewater pressure (drained) and will be conducted relatively quickly. This stress-path will simulate rapid stress changes during

the construction phase of a repository. Failure is achieved by simultaneously altering both confining pressure and load stress. Two tests will be conducted and end permeability will be measured using water and gas as a permeant. The test will be conducted as follows:

- Specimen will be fully resaturated (S_w>0.99) while subject to the original conditions of effective (3D) stress.
- The intrinsic permeability of the specimen will then be measured by a combination of controlled flow rate and/or constant head methodologies using a synthetic groundwater solution.
- Porewater pressure will be reduced to atmospheric conditions.
- For gas testing: After a period of pore pressure equilibration, gas testing (using H_e as the permeant) will commence using a combination of controlled flow rate and/or constant pressure techniques until a steady stream of gas is observed, thereby determining the initial gas transport parameters.
- Simultaneous increments in both load and confining pressure will then be applied to the specimen (while monitoring volume change) in order to achieve failure.
- The intrinsic permeability of the specimen will then be remeasured in order to define the change in intrinsic permeability.
- Post-test analysis of the core will be performed to examine fabric deformation along individual failure planes and to quantify the basic geotechnical properties of the remaining core.
- For aqueous testing: The location of any aqueous tracers which may have been used will be investigated at this time.
- Test stages may be added or deleted depending on previous results.
- Full interpretation and modeling of the data (where appropriate) will be undertaken.

Stress path 2 - dry side deformation with porewater pressure

The second stress-path will be similar to that used in Stress-path 1. However, due to limitations of the experimental geometry it will not be possible to follow the exact same path as it will require pore-water pressure to exceed confining pressure and this would result in failure of the Hoek sleeve. Stress-path 2 will be driven at a much slower rate than for BGS Path 1, with a stepped approach, pausing the stress path and measuring the permeability at key points of the test. This will have the added benefit of minimising superposition. This experiment will help to confirm whether or not permeability changes below the failure envelope and whether permeability begins to alter before any other mechanical indicator is observed. Again, two tests will be performed, one using an aqueous permeant and the other a gaseous permeant. The test will be conducted as follows:

- Specimen will be fully resaturated (S_w>0.99) while subject to the original conditions of effective (3D) stress.
- The intrinsic permeability of the specimen will then be measured by a

combination of controlled flow rate and/or constant head methodologies using a synthetic groundwater solution.

- For gas testing: After a period of pore pressure equilibration, gas testing (using H_e as the permeant) will commence using a combination of controlled flow rate and/or constant pressure techniques until a steady stream of gas is observed, thereby determining the initial gas transport parameters.
- Simultaneous increments in both load and confining pressure will then be applied to the specimen (while monitoring volume change) in order to achieve failure. Table 2 provides an outline of these changes and the resulting change in effective stress.
- The intrinsic permeability of the specimen will be measured at each increment of stress in order to define the change in intrinsic permeability.
- Post-test analysis of the core will be performed to examine fabric deformation along individual failure planes and to quantify the basic geotechnical properties of the remaining core.
- For water testing: The location of any aqueous tracers which may have been used will be investigated at this time.
- Full interpretation and modeling of the data (where appropriate) will be undertaken.

Stress path 3 - wet side deformation with porewater pressure

A third stress-path will be investigated in order to look at the long-term convergent deformation observed over much longer time scales; this will result in a stress path that results in wet-side deformation. This may result in significantly different processes and permeability evolution from that observed in Stress path 2. Again, two tests will be performed, one using an aqueous permeant and the other a gaseous permeant. The test programme will be identical to that described for Stress path 2.

Provisional time line

FORGE Year 1: Full calibration and proving of the SPP and Stress-path definition.

Year 2: Stress path 1 and start of stress path 2

Year 3: Completion of stress path 2

Year 4: Stress path 3

Experimental Systems and Planned Activities

Organisation
British Geological Survey
Work package
WP 4.1.2 Validation of critical stress theory applied to repository concepts
Description of planned research

Critical stress theory (Figure 1) states that fractures or faults at certain orientations to the stress tensor will act as permeability barriers, while other orientations will act as permeability conduits. Studies of hydrocarbon reservoirs have confirmed this approach when active shearing occurs along the fault network. The inter-play of fracture orientation and stress tensor direction has a two-fold importance in the repository; (1) in the EDZ where a complex range of fracture orientations will be present in a complex localised-stress field, (2) in the far field where pre-fractured host rock is located.

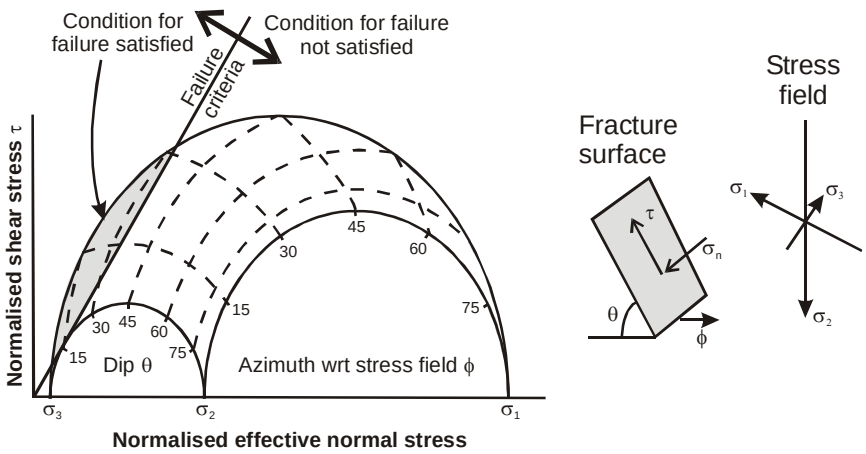

Figure 1: Definition of critical stressed fractures. Modified from Barton *et al.* (1995).

The objective of this experimental programme is to examine the relationship between the stress tensor direction and fracture orientations, as well as examining the conditions under which fractures become conductive. In doing this experimentation it will validate the critical stress theory (Bartob et all., 1995), which could be used to understand the reasons why some fractures in the EDZ (Excavation Damage Zone) are conductive and hence aid performance assessment. Specific objectives are:

(i) perform and interpret small scale experiments to investigate relationship between the stress tensor direction and fracture orientations, as well as examining the conditions under which fractures become conductive,
(ii) provide high-quality experimental data to test/validate the critical stress theory in relation to repository condition for the first time.

Experimental set-up

The angled shear rig (Figure 2) is a custom made piece of experimental equipment designed and commissioned for this study. It comprises 5 main components:

1. Rigid frame that has been designed to deform as little as possible during the experiment,
2. Normal load system comprising an Enerpac hydraulic ram that is controlled using an ISCO 260D syringe pump, a rigid loading frame and an upper thrust block,
3. Shear force actuator designed to drive shear as slow as 14 microns a day at a constant rate (equivalent to 1 mm in 69 days),
4. Pore pressure system comprising an ISCO 500D syringe pump that can deliver either water or gas through the centre of the top block directly to the fracture surface,
5. A state-of-the-art custom designed data acquisition system using National Instruments LabVIEW™ software facilitating the remote monitoring and control of all experimental parameters.

The rig has been designed to achieve up to 20 MPa normal stress (72 kN force) on a sample size of 60 mm × 60 mm. At this normal load, it is expected that shear force will not exceed 50 kN. Normal load is imposed by a rigid Enerpac hydraulic ram and loading frame. An ISCO 260 series D syringe pump is used to maintain a constant normal load on the sample. The Enerpac ram has a stroke of 105 mm, which means that the ram can easily accommodate the vertical displacement of the top block as it rides up the fracture surface at constant normal load.

The shear-force actuator is comprised of an ISCO 500 series D syringe pump, which has been modified by mounting horizontally. The ISCO pump is designed to push a syringe through a barrel to deliver pressure. In the current setup, the barrel has been removed and the drive-train directly connected to the sample assembly, itself mounted on a low friction bearing.

A second ISCO 500 series D syringe pump is used to deliver pore pressure, be it water or gas. The same controller is used to operate the shear actuator and pore fluid pressure ISCO pumps.

The upper and lower thrust blocks of the apparatus are made out of stainless steel with a contact area of 60 mm × 60 mm. The lower thrust block is longer than the top one so that the contact area is maintained constant throughout the test. A clay gouge is placed between the two thrust blocks so as to stop cold-welding of the surfaces. If time is sufficient the thrust blocks can be modified in order to hold rectangular rock

samples.

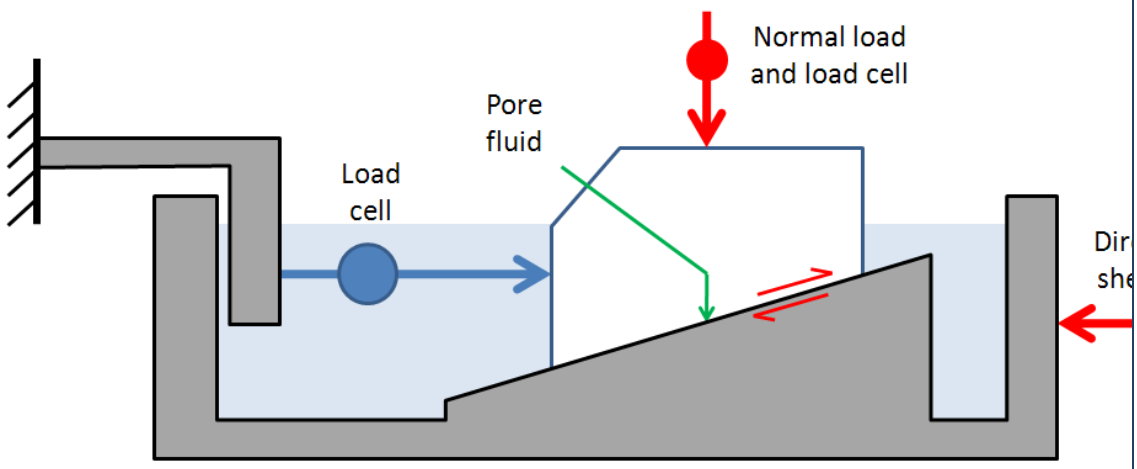

Figure 2: Schematic of the shear apparatus. The test programme will examine transmissivity for a number of fracture angles.

Boundary conditions

The test is conducted at constant normal load and constant displacement throughout the experiment. The contact area between the thrust blocks is maintained constant. The fracture surface is free to swell in response to the pore fluid. The angle of the artificial fracture surface is known to within 0.5° and the surface is polished so as to remove any effect of surface roughness. All experiments will be conducted at the same strain rate.

Measured parameters

The following parameters are measured directly:

- Slope of the fracture surface
- Shear load
- Normal load
- Displacement of the shear actuator (resolution of 0.003 mm)
- Vertical displacement of the top block (resolution of ~ 50 nm)
- Horizontal displacement of the top block (resolution of ~ 50 nm)
- Laboratory temperature – upper level
- Laboratory temperature – lower level
- Laboratory temperature – sample bath
- Pore fluid injection circuit pump (pressure, flow and volume)
- Normal load pump (pressure, flow and volume)
- Shear actuator (pressure, flow and volume)
- Pore fluid pressure of injection system

From the observed data, the following can be calculated:

- Shear stress
- Normal stress
- Dilation of the fracture
- Flux into the fracture
- Fracture transmissivity
- Full stress tensor
- Strain rate

Test programme

A number of laboratory experiments will be undertaken to provide quantitative data to examine the relationship of fracture conductivity with the orientation of a fracture in relation to the stress tensor direction. The experimental programme is not defined fully as it will be evolutionary based on ongoing experimental results.

The experimental programme will investigate a fracture's transmissivity (using both water and gas). A fully saturated clay filled fracture, of known thickness, will be contained between two rigid blocks. This experiment will be undertaken on a fracture at a range of orientations (0, 15, 30, 45 & 60°) to the stress tensor direction.

The tests will be undertaken at a number of normal loads, which will be increased in a step like manner, for a given strain rates. The sensitivity of these processes to changes in strain rates will also be considered. Each test will be undertaken using both water and gas to determine the transmissivity of the fracture.

Provisional time line

FORGE Year 1: Commissioning and testing of the experimental apparatus

Year 2: Start of aqueous testing on a number of fracture orientations

Year 3: Completion of aqueous testing and start of gaseous testing

Year 4: Completion of gaseous testing and reporting

Experimental Systems and Planned Activities

Organisation
SCK-CEN
Work package
WP 4.1.3 Gas-driven radionuclide transport through closed fissures of EDZ and seal/host rock interface
Description of planned research/modelling work
During gas breakthrough, contaminated water could be expelled by the gas phase. Radionuclides and contaminants could be driven out of the undisturbed clay by a two-phase flow mechanism faster than the normally expected diffusive transport. This work package should help us to answer the question: "What is the role of the EDZ and the interface host rock-EBS during the release of a gas overpressure and how will the transport of radionuclides occur?" Will the gas-driven radionuclide transport occur at the matrix porosity or at the fissure porosity or at the interface? To answer this question, we will perform experiments with permeameter cells using Boom Clay samples with an artifical fissure and combined Boom Clay – bentonite samples. Both samples are first percolated with uncontaminated water for self-sealing. In the mean time, a small Boom Clay plug is saturated with porewater that contains an anionic tracer. Finally both plugs are combined and a gas breakthrough test will be performed to investigate gasinduced transport of this tracer.
Experimental set-up/code description

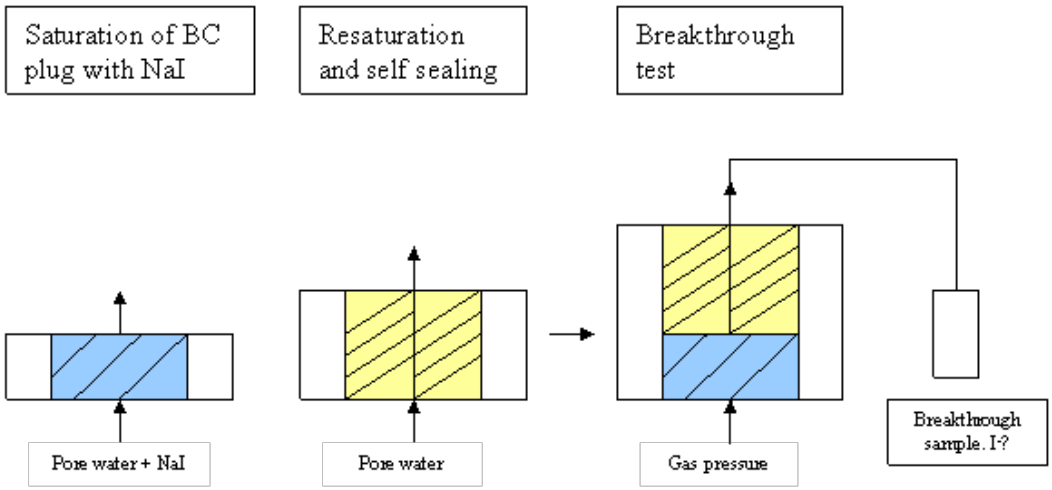

1. Saturate a BC plug with NaI or other RN spiked solution
2. Cut a plug of BC, put both parts together again and saturate with pore water
3. CT measurement
4. Add the NaI plug
5. Add gas pressure and increase till breakthrough
6. Analyse the breakthrough sample. Is I- present and thus transported?
7. CT measurement

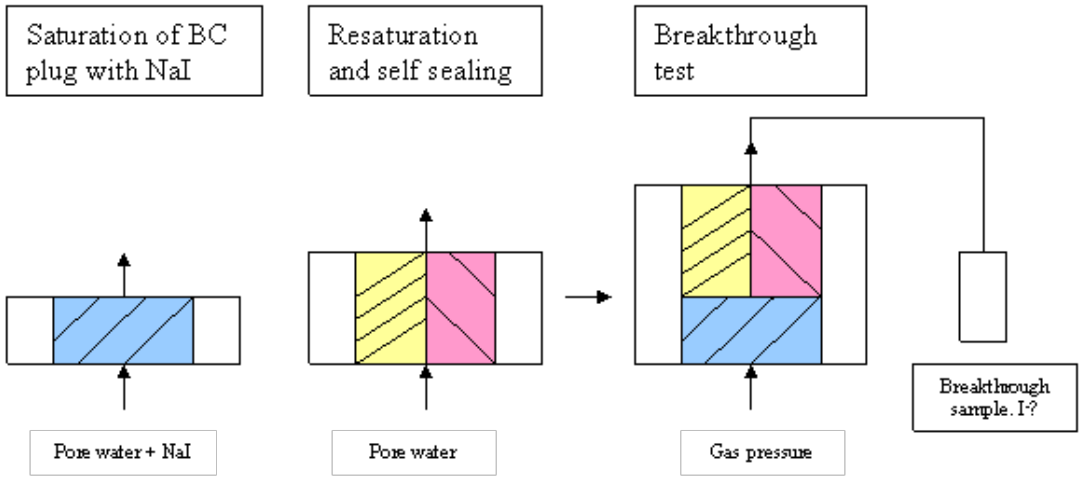

1. Saturate a BC plug with NaI or other RN spiked solution
2. Cut a plug of BC, put one BC part together with half a plug of dry compacted bentonite and saturate with pore water
3. CT measurement
4. Add the NaI plug
5. Add gas pressure and increase till breakthrough
6. Analyse the breakthrough sample. Is I- present and thus transported?
7. CT measurement

Draft of the permeameter cell that will be used:

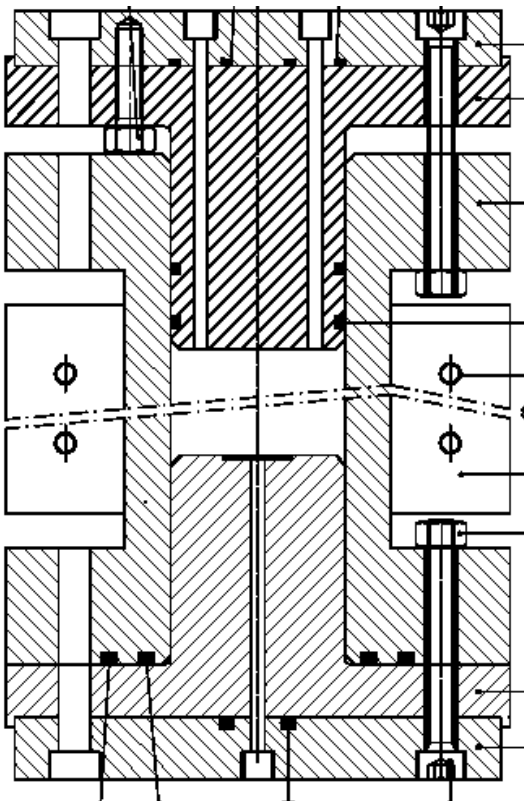

Boundary conditions

Volume: constant (diameter 38mm, height NaI plug 10 mm, height disturbed BC plug: 40mm, height combined BC-bentonite plug: not yet fixed)
Type of bentonite not yet defined, dry density and dimensions still need to be defined wrt. reasonable hydration time, swelling pressure,…
Temperature: constant (20 ±2 °C)
Pressure: gradually increased (Day 1: 1,1 Mpa, Day 2: 1,5 Mpa, Day 3: 1,9 Mpa, Day 4: 2,1 Mpa, Day 5: 2,3 Mpa)

General parameters for Boom Clay:
Hydraulic conductivity: 1.3 - 2.4 10^{-12} m²/s
Total porosity: 36 – 40 %
Water content: 19 – 24 % dry wt

Stainless steel filters:
Porosity: 40%
Thickness: 2mm
Diameter: 15mm (bottom) and 38mm (top)

Measured parameters/output from code

Gas breakthrough pressure
Displaced volume of water
Concentration iodide in displaced water

CT images
Test/modelling programme
1. Tests with fissured Boom Clay 2. Tests with combined Boom Clay - bentonite
Provisional time line
D4.1: Description of the experimental set-up: March 2010 March –June 2010: tests with fissured Boom Clay September 2010 – December 2011: tests on combined Boom Clay – bentonite (timescale depending on the saturation of the bentonite)

Experimental Systems and Planned Activities

Organisation
NAGRA: Nationale Genossenschaft für die Lagerung radioaktiver Abfälle Contact: Dr Joerg Ruedi
Work package
Work package 4:2 Disturbed host rock (DHR) formations **Work package 4.3 Numerical modelling**
Description of planned research/modelling work
The HG-A experiment (Gas Path Host rock & Seals) is an in situ gas leak-off test being performed within the framework of the Mont Terri Project. The experiment aims are: • Demonstration of gas escape from a sealed disposal tunnel. • Assessment of the role of the EDZ as an important gas path. • Evaluation of sealing processes along the EDZ. • Determination of rock permeability on the scale of the tunnel (“macropermeability”). The experiment was initiated in 2005 with the drilling of monitoring boreholes and excavation of the HG-A microtunnel (1m diameter, total length 13m). Since then the following experimental activities have been performed: • Monitoring of excavation and EDZ development • Instrumentation and backfilling of the microtunnel • Sealing of the microtunnel with a purpose-built Megapacker • Saturation of the microtunnel test section and EDZ • Hydraulic testing In addition to this work, studies have been performed to investigate remote sensing of EDZ evolution It is planned to initiate gas injection into the test section in 2010, followed by repeat hydraulic testing and post-mortem characterisation.
Experimental set-up/code description
The experimental layout is shown in Figure 1.

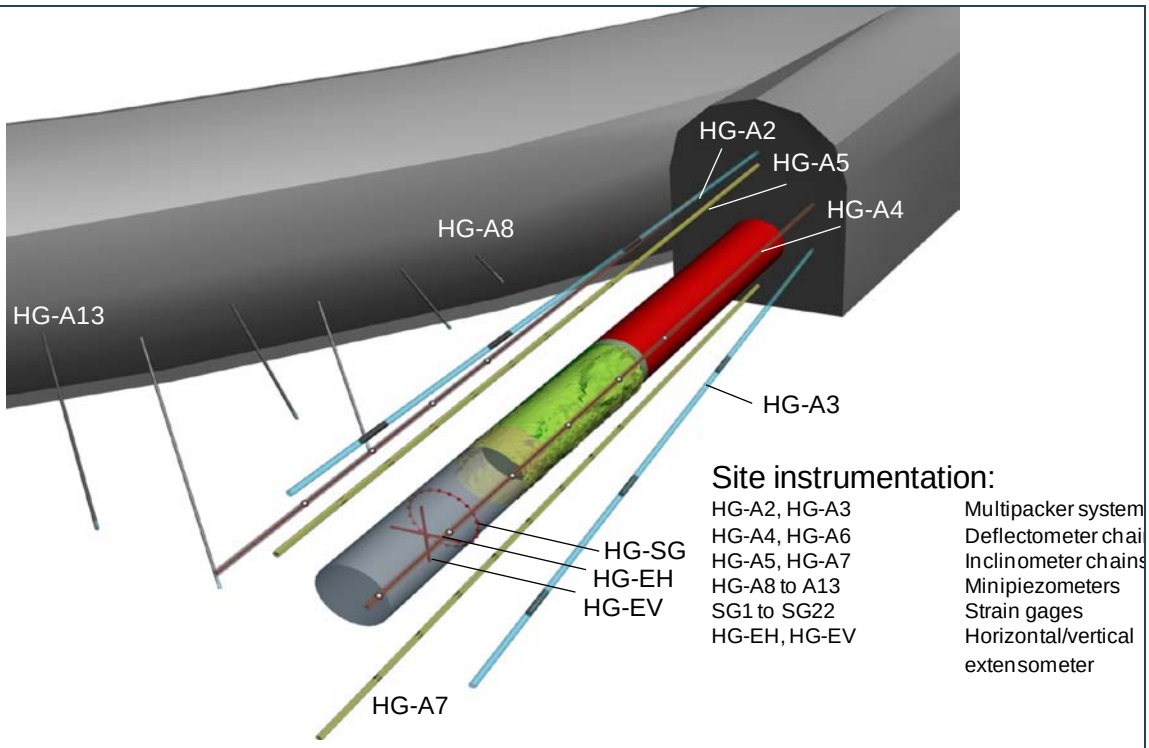

Figure 1: HG-A experimental layout.

Instrumentation in the test section and geosphere is listed below:

Test Section instrumentation		
Instrument	**Count**	**Measurement**
Piezometers	2	Pore pressure
Extensometers	2	Horizontal/vertical deformation
Strain gauges	22	Circumferential deformation
TDRs	8	Volumetric water content
Geophones	8	Acoustic emission – separate DAS
Flowmeters	2	Gas/Water flow control
Seal Section instrumentation		
Instrument	**Count**	**Measurement**
Piezometers	12	Pore pressure
Total pressure cells	6	Load on the tunnel wall + temperature
TDRs	2	Volumetric water content
Packer Pressure	1	Water pressure
Geosphere instrumentation		
Instrument	**Count**	**Measurement**
Piezometers	14	Pore pressure
Deflectometers	2	Deformation (8-point)
Clino-chains	2	Deformation (8-point)
Stressmeters	3	Deformation and stress + temperature
Packer Pressure	6	Water pressure

Boundary conditions

External pressure and stress boundary conditions controlled by the environment of the underground rock laboratory. Stresses are expected to be similar to those in other parts of the rock laboratory.
Sealing pressure/stress controlled by Megapacker.
Imposed water and gas injection boundary conditions are controlled and selected according to the state of the system (saturation, Megapacker pressure self-sealing etc).
Environmental conditions within the HG-A niche (microtunnel mouth) are monitored.

Measured parameters/output from code

Response to excavation, EDZ evolution, saturation, hydraulic testing and gas injection.
Characterisation of EDZ and EDZ evolution
Characterisation of self-sealing processes
Comparison of pre/post gas hydraulic behaviour
Determination of macropermeability.

Test/modelling programme

Overall test programme is divided into 5 main experimental phases as shown in Figure 2.

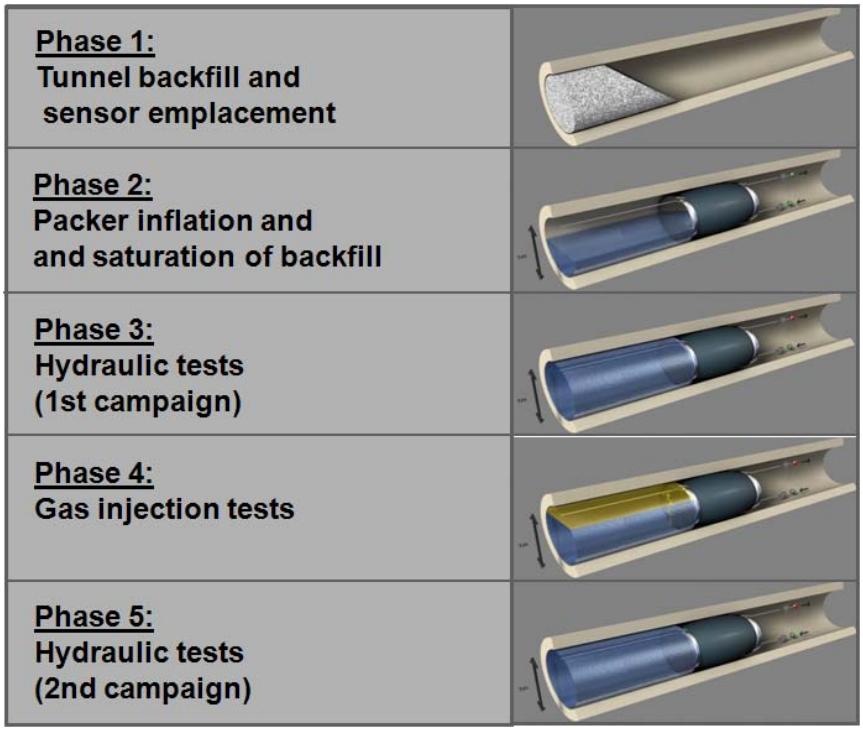

Figure 2: HG-A experimental phases.

Provisional time line

(note: the HG-A in-situ experimented is not funded by the EU; the time schedule of the HG-A experiment may be changed in the course of the project by the Mont Terri Programme Committee)

Microtunnel excavation and EDZ monitoring	January	2005-February

	2006
Phase 1: Tunnel backfill & instrumentation	March 2006-May 2006
Phase 2: Packer inflation and backfill saturation	June 2006-June2007
Phase 3: Hydraulic tests	July 2007-End 2009
Phase 4: Gas Injection tests	Early 2010-mid 2011
Phase 5: Hydraulic tests	Mid 2011-2012
Excavation and Post-mortem characterisation (optional)	2013 onwards

Experimental Systems and Planned Activities

Organisation
SCK-CEN
Work package
WP 4.2.2 Gas transport in EDZ-in situ experiment in Boom Clay
Description of planned research/tests

The aim of the gas transport in-situ tests is to simulate at a relatively large scale the expected sequence of phenomena in a medium-level waste (MLW) repository that could lead to gas-driven radionuclide transport. The in-situ experiment will be performed in the HADES underground research laboratory (URL). It will be installed in an existing opening of the reinforcement ring especially dedicated for this test. The reinforcement ring is located opposite to the Praclay gallery at the west side of the Connecting gallery. The test setup consists of a 40-cm diameter multi-packer system and two multi-filter piezometer observation boreholes (see description above). The large packer and boreholes will be drilled horizontally to a depth of approximately 20 to 22 m westwards from the reinforced ring in the connecting gallery.

The large packer simulates in a controlled way the action of a swelling clay seal on the host rock and especially on the sealing of the EDZ. The packer will be instrumented with displacement sensors covering the radial directions. There are two different filter sections in the large packer: one for injection and one for detection. The injection filters allow for injection of different tracer-solutions. They are constructed such that the dead volume of the injection chamber is kept to a minimal.

The detection filter sections in the large packer and those in the multi-piezometer observation borehole allow monitoring diffusion contaminants both in the directions parallel and perpendicular to bedding. The filter sections located between the packers are used for gas injection after injecting the anionic tracers. A combination of both active and non-active tracers could be used. The deepest filter section is used for a large-scale long-term migration test with anionic tracers that will be used as reference for radionuclide migration in undisturbed Boom Clay.

Surrounding the large packer, two smaller boreholes equipped with multi-filter piezometers will be installed to measure the water pressure profiles and to follow the evolution of the tracer concentrations as a function of time. Before the gas injection test is performed, the packer will be used to seal the EDZ and during the gas migration test, at gas breakthrough, the packers will be used to determine at which total stress the gas pathway closes and eventually re-opens. As the detection piezometers will be installed early on in the project (between month 6 and 12) it will be possible to

characterize the EDZ created by the drilling and installation of the large diameter packer set-up. In this way it will be possible to know which filters have initial connection with the large packer through the EDZ.

Experimental set-up/description

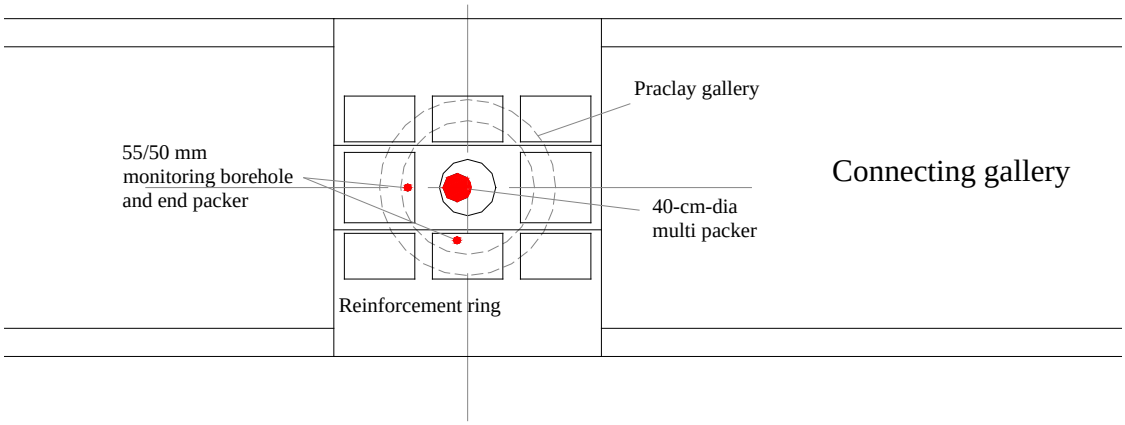

Details: general installation layout

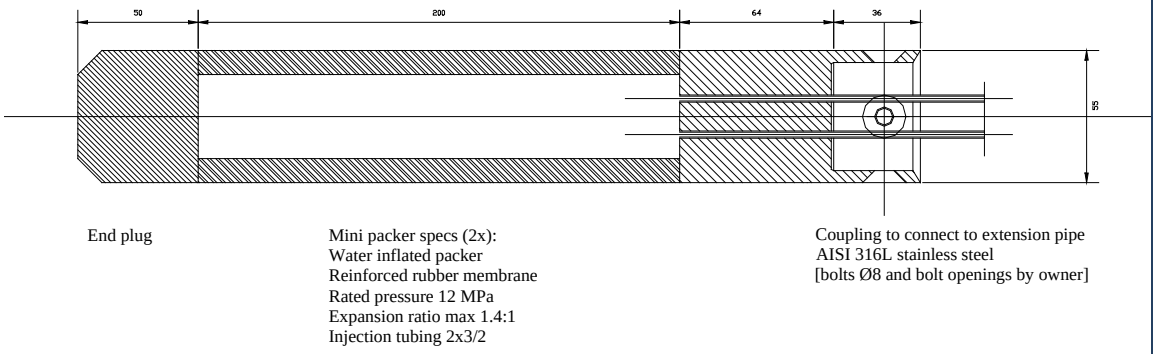

Details: mini-packer for multi-filter piezometer borehole

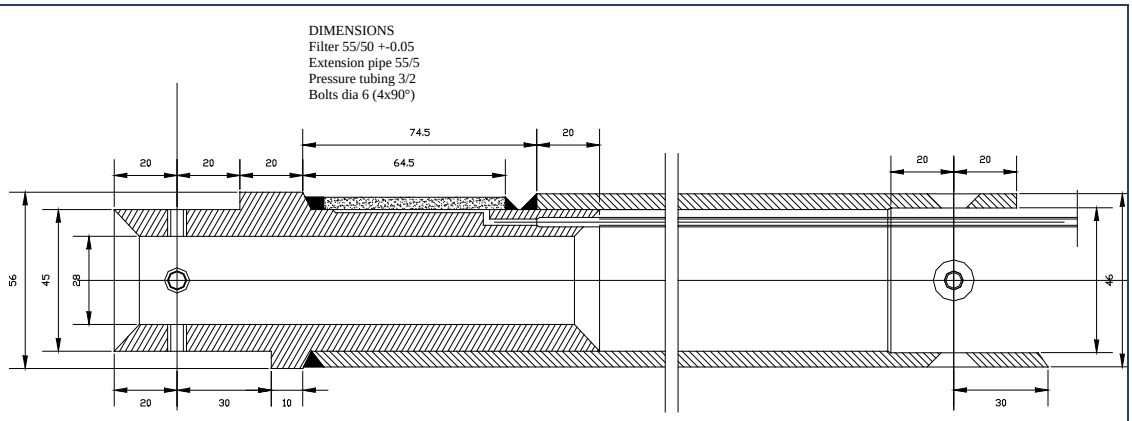

Details
Longitudinal section showing filter & conduit tubing
[Bolts Ø6]

Details: detection filters multi-filter piezometer borehole

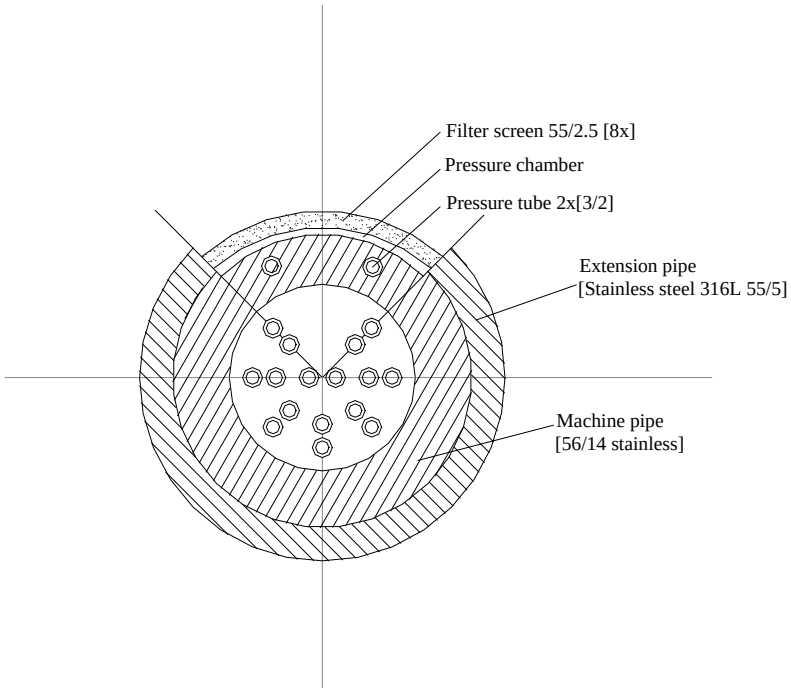

Details: Cross-section multi-filter piezometer borehole

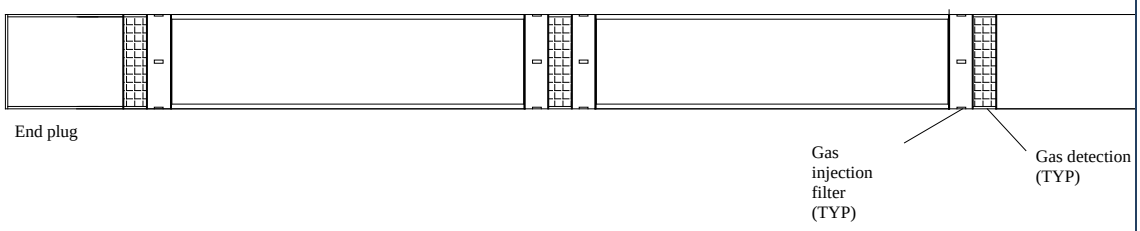

Details: large multipacker

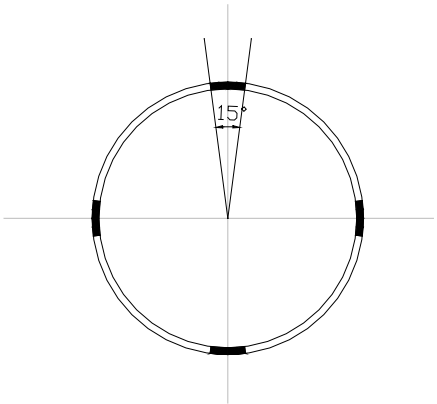

Details: injection filter - large multipacker

Boundary conditions

Pressure: in-situ, expected average 2.2 MPa

General parameters for Boom Clay:
Hydraulic conductivity: 1.3 - 2.4 10^{-12} m²/s
Total porosity: 36 – 40 %
Water content: 19 – 24 % dry wt

Stainless steel injection filters:
Porosity: 40%
Thickness: approximately 20 mm
Diameter: approximately 400 mm seamless Inox
Pore size: 5 microns
Length: 50 mm

Measured parameters/output from code

Gas breakthrough
In situ stress

Test/modelling programme

In situ tests in Boom Clay

Provisional time line

2010: design and fabrication
2010: installation

FORGE
Fate Of Repository Gases
European Commission FP7

Experimental Systems and Planned Activities

Organisation
CTU in Prague Faculty of Civil Engineering Centre of Experimental Geotechnics Thákurova 7 166 29 Prague 6 Czech Republic
Work package
WP 4.2.3 study of gas transport in disturbed crystalline rock
Description of planned research/modelling work
Study of gas transport in disturbed crystalline rock using large scale gas injection tests.
Experimental set-up/code description
Several test location for gas injection tests in crystalline rocks. Constant pressure head and pressure decay tests with different length of test zone. Monitoring using boreholes in proximity at later stages. 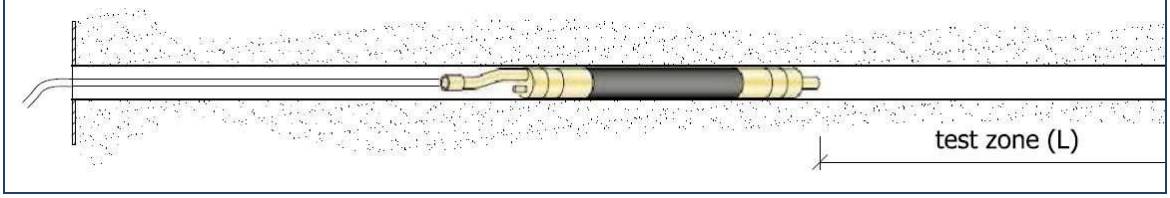

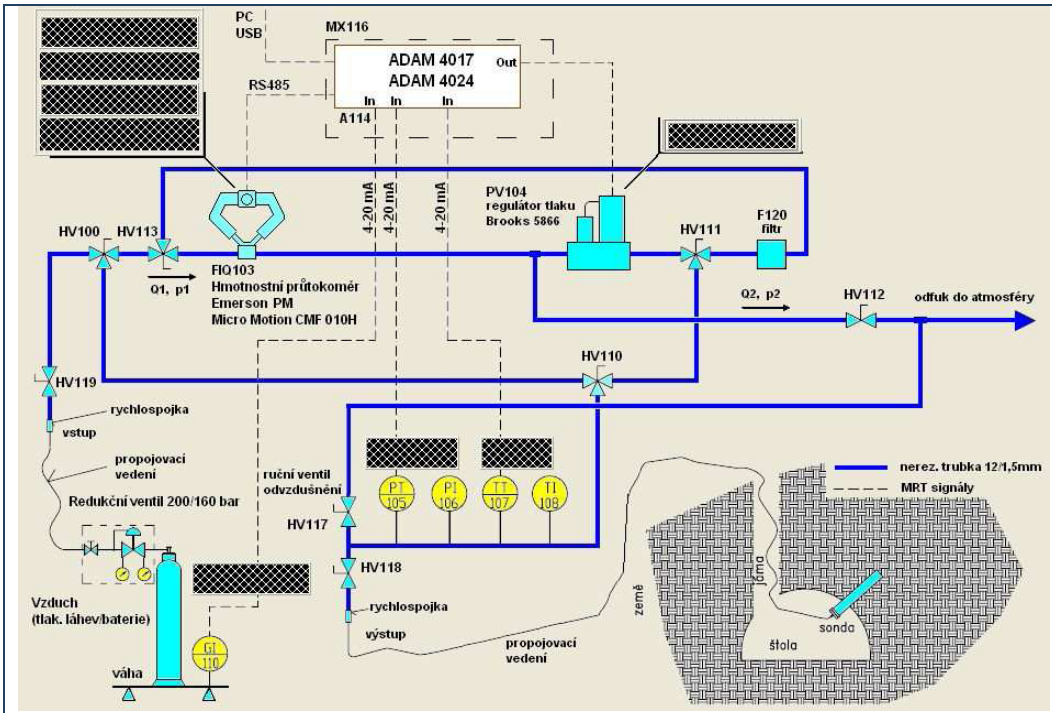

Equipment scheme

Equipment has several modes of operation depending on test type. For constant pressure test it is able to automatically adjust inflow rate to maintain selected pressure in test zone. Automatically records pressure, flow (in/out depending on test setup) and temperature. Working pressure is up to 15MPa.

Boundary conditions

Single injection point (borehole) in the continuum. Axisymetrical problem.

Measured parameters/output from code

Temperature, gas flow/volume, gas pressure.

Test/modelling programme

Single borehole gas injection with packer at several levels. Monitoring using boreholes in proximity at later stage.

Typical test scenario: Test starts in constant pressure head mode where gas is injected into test zone until selected pressure is achieved and maintained for some time. Usually several pressure levels are tested (stepwise increase of pressure). Then decay test is performed either allowing gas flow trough equipment out or only trough the rock.

Provisional time line

Equipment testing and site preparation during 2009 (including geology survey) -DONE.

Simple short tests in situ during 2010 and longer ones later on. Gradual increase of test duration.