Forge packers installation report

Forge Deliverable D4.4, D4.11, D4.18 and D4.19 SCK•CEN-ER-241

	Name	Organisation	Signature	Date
Compiled	Lou Areias	SCK•CEN		07/10/2013
Verified	Elke Jacops	SCK•CEN		14/10/2013
Approved	Norbert Maes	SCK•CEN		14/10/2013

Keywords

Moga packers, packer system design, installation, modelling design, acquisition and monitoring

Bibliographical reference

Lou Areias, Geert Volckaert, Norbert Maes, Elke Jacops and Eef Weetjens, 2013. Forge packers installation report. Forge deliverable D4.4, D4.11 and D4.18 SCK•CEN-ER-241, pp. 44

Euratom 7th Framework Programme Project: FORGE

EURATOM

SCK•CEN
STUDIECENTRUM VOOR KERNENERGIE
CENTRE D'ETUDE DE L'ENERGIE NUCLEAIRE

EXTERNAL REPORT
SCK•CEN-ER-241
13/LAr/P-43

Forge packers installation report

Forge Deliverable D4.4, D4.11, D4.18 and D4.19

Lou Areias, Geert Volckaert, Norbert Maes, Elke Jacops and Eef Weetjens

Euratom 7th Framework Programme Project: FORGE

October, 2013

SCK•CEN
Boeretang 200
BE-2400 Mol
Belgium

RDD

ISO 9001 CERTIFIED VINÇOTTE

EXTERNAL REPORT OF THE BELGIAN NUCLEAR RESEARCH CENTRE
SCK•CEN-ER-241
13/Eja/P-42

Forge packers installation report

Forge Deliverable D4.4, D4.11, D4.18 and D4.19

Lou Areias, Geert Volckaert, Norbert Maes, Elke Jacops
and Eef Weetjens

Euratom 7th Framework Programme Project: FORGE

October, 2013
Status: Unclassified
ISSN 1782-2335

SCK•CEN
Boeretang 200
BE-2400 Mol
Belgium

© SCK•CEN
Studiecentrum voor Kernenergie
Centre d'étude de l'énergie Nucléaire
Boeretang 200
BE-2400 Mol
Belgium

Phone +32 14 33 21 11
Fax +32 14 31 50 21

http://www.sckcen.be

Contact:
Knowledge Centre
library@sckcen.be

COPYRIGHT RULES

All property rights and copyright are reserved to SCK•CEN. In case of a contractual arrangement with SCK•CEN, the use of this information by a Third Party, or for any purpose other than for which it is intended on the basis of the contract, is not authorized. With respect to any unauthorized use, SCK•CEN makes no representation or warranty, expressed or implied, and assumes no liability as to the completeness, accuracy or usefulness of the information contained in this document, or that its use may not infringe privately owned rights.
SCK•CEN, Studiecentrum voor Kernenergie/Centre d'Etude de l'Energie Nucléaire
Stichting van Openbaar Nut – Fondation d'Utilité Publique - Foundation of Public Utility
Registered Office: Avenue Herrmann Debroux 40 – BE-1160 BRUSSEL
Operational Office: Boeretang 200 – BE-2400 MOL

Fate of repository gases (FORGE)

The multiple barrier concept is the cornerstone of all proposed schemes for underground disposal of radioactive wastes. The concept invokes a series of barriers, both engineered and natural, between the waste and the surface. Achieving this concept is the primary objective of all disposal programmes, from site appraisal and characterisation to repository design and construction. However, the performance of the repository as a whole (waste, buffer, engineering disturbed zone, host rock), and in particular its gas transport properties, are still poorly understood. Issues still to be adequately examined that relate to understanding basic processes include: dilational versus visco-capillary flow mechanisms; long-term integrity of seals, in particular gas flow along contacts; role of the EDZ as a conduit for preferential flow; laboratory to field up-scaling. Understanding gas generation and migration is thus vital in the quantitative assessment of repositories and is the focus of the research in this integrated, multi-disciplinary project. The FORGE project is a pan-European project with links to international radioactive waste management organisations, regulators and academia, specifically designed to tackle the key research issues associated with the generation and movement of repository gasses. Of particular importance are the long-term performance of bentonite buffers, plastic clays, indurated mudrocks and crystalline formations. Further experimental data are required to reduce uncertainty relating to the quantitative treatment of gas in performance assessment. FORGE will address these issues through a series of laboratory and field-scale experiments, including the development of new methods for up-scaling allowing the optimisation of concepts through detailed scenario analysis. The FORGE partners are committed to training and CPD through a broad portfolio of training opportunities and initiatives which form a significant part of the project.

Further details on the FORGE project and its outcomes can be accessed at www.FORGEproject.org.

Contact details:

Lou Areias
SCK•CEN
Tel: +3214332985
email: lou.areias@sckcen.be
web address: www.sckcen.be
Address: Boeretang 200, B-2400 Mol, Belgium

Norbert Maes
SCK•CEN
Tel: +3214333235
email: norbert.maes@sckcen.be
web address: www.sckcen.be
Address: Boeretang 200, B-2400 Mol, Belgium

Elke Jacops
SCK•CEN
Tel: +3214333222
email: elke.jacops@sckcen.be
web address: www.sckcen.be
Address: Boeretang 200, B-2400 Mol, Belgium

Foreword

This report describes the results of the experiments performed by SCK•CEN in the framework of WP4 Disturbed Host Rock formations – WP 4.1.3 Gas-driven radionuclide transport through closed fissures of EDZ and seal/host rock interface and WP5 Undisturbed host rock formations – WP5.1 gas transport laboratory experiments. The goal of this research was to answer the question: "To what extent can a gas pressure build-up enhance the transport of radionuclides, and what is the role of the disturbed host rock in the EDZ and the interfaces between the host rock and EBS".

Acknowledgements

The research was realised with the technical support of Tom Maes, Marc Van Gompel, Frank Vandervoort, Jef Peeters, Roger Mertens, Jef Sannen, Thomas Fierz, Simon Isler, Frans Slegers, Kris Moerkens, Johan Peters, Bert Vreys and Christian Lefevre.

Next to the financial support of the European Commission in the framework of the FP7 FORGE project, this work is performed in close cooperation with, and with the financial support of ONDRAF/NIRAS, the Belgian Agency for Radioactive Waste and Fissile Materials, as part of the programme on geological disposal of high-level/long-lived radioactive waste that is carried out by ONDRAF/NIRAS.

Abstract

A mega packer and borehole piezometer monitoring system have been installed at the Underground Research Facility (URF) in Mol as part of the FORGE European Commission FP7 project, under deliverables D4.4 dedicated to gas experiments. The packer and piezometer monitoring system were installed to a depth of 18.5 to 19.9 m in horizontal boreholes drilled in the Boom Clay host rock formation at the level of 225 m depth below surface. The system consists of two identical large-diameter inflatable packers and two multi-filter pore pressure monitoring boreholes.

The design and construction of the mega packer system was awarded to Solexperts of Switzerland following a public tender offer procedure. The system consists of two identical large-diameter reinforced-rubber inflatable packers, two multi-filter monitoring piezometer boreholes and a full data acquisition system to monitor inflation pressure, total pressure, packer displacement, pore water pressure and gas pressure. The multi-filter monitoring boreholes were designed and constructed by SCK•CEN. Both systems were installed in the URF by ESV EURIDICE in collaboration with SCK•CEN and Solexperts.

The packers are equipped with radial displacement sensors, pore pressure measurement filters, packer inflation pressure and total pressure sensors. With the exception of the packer inflation pressure sensors, which measure the inflating pressure of the packers using pressure sensors installed outside of the packers, the pore water filters, total pressure sensors and displacement transducers are embedded in the rubber membrane of the packers. This allows the direct measurement of pressure and displacement at the interface between the clay and the packers

without the need to correct for the stiffness of the packers. In addition, the metal sleeves connecting the packers and the extension tubing contain both injection and detection filters to be used for carrying out gas experiments. The inflatable rubber sections are designed for maximum inflating pressure of 120 bars.

The mega packers were installed in a horizontal borehole drilled to accommodate the packers. During the drilling of the large-diameter borehole, a series of septaria layers were encountered, which eventually caused the blockage of the drill at the depth between 17.5 and 19.5 m. The drill rods and head were eventually recovered from the borehole to allow the installation of the mega packers. However, the efforts required to free the drill resulted in a significant deviation of the borehole and created a large cavity in the area of the packers. As a result, the time needed for the clay to recover and to reach a stable hydro-mechanical condition around the packers, which is necessary before starting the planned gas tests, is taking far longer than originally expected. At the time of writing of this report, the clay had not yet reached the desired level of hydro-mechanical equilibrium to allow the gas tests to be carried out.

In addition to the slower than expected convergence of the clay around the packers, leakage in both packers has also been observed. The impact of this leakage and eventual measures to deal with it are being assessed. These include tests to verify the working condition of the packers and the feasibility of injecting a solution to stop the leakage.

Contents

Foreword **2**

Acknowledgements **2**

Abstract **2**

1. Introduction **5**

2. Objectives of gas experiments **5**

3. Site Location **5**

4. Design of multi-filter monitoring piezometers **6**

4.1. Monitoring piezometers 6

4.2. Data acquisition system 7

5. Design of mega packers **7**

5.1. General specifications 7

5.2. Instrumentation 8

5.3. Packer design performance 10

5.4. Interval injection and detection filters 10

5.5. Extension tubing and coupling 11

5.6. End piece 13

5.7. Data acquisition system and channel allocation 14

5.8. Packer system quality control and performance tests 19

6. Installation **33**

6.1. Multi-filter monitoring boreholes 33

6.2. Mega packers 35

6.2.1. Transport of packers and extension tubing to the URF 35

6.2.2. Installation of packer system 37

6.2.3. Problems encountered during installation of packers 39

7. Monitoring and follow up **40**

8. Remedial action for leakage of packers **42**

9. Planned gas tests **42**

10. Conclusions and final remarks **42**

1. Introduction

This report presents the design, installation and follow up of the Forge mega-packer system installed in the Boom Clay host formation at the Underground Research Facility (URF) in Mol, Belgium in June 2011. The installation consists of two multi-filter monitoring boreholes and one dual mega packer system. This work is part of the FORGE European Commission FP7 project, under deliverables D4.4 dedicated to gas experiments.

2. Objectives of gas experiments

The objectives of the gas experiments planned at the URF in Mol are to study the role played by the excavated disturbed zone (EDZ), the interface host rock/engineered barrier system (EBS) and the host formation on the release of gas overpressure and radionuclide (RN) transport in the Boom Clay.

3. Site Location

The Forge packer system has been installed in the URF in Mol, opposite to the PRACLAY gallery, as shown in Figure 1. The URF is located approximately in the middle of the Boom Clay, at a depth of 225 m below surface, where the thickness of the Boom Clay is approximately 100 m. The multi-filter monitoring piezometers and the large packers were installed horizontally in the clay to a depth of 19.9 m and 18.55 m, respectively.

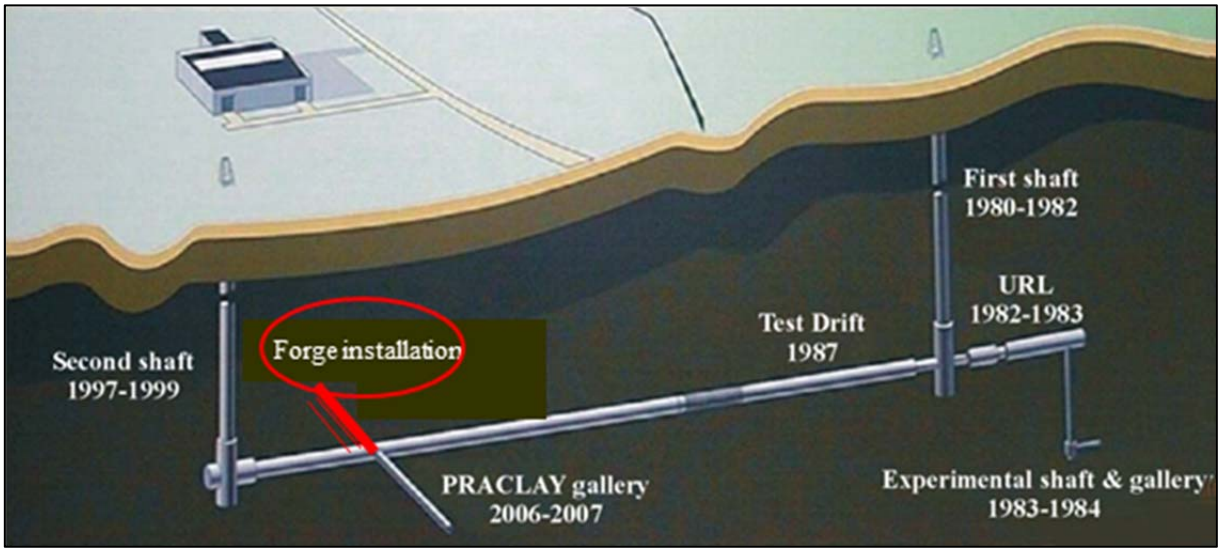

Figure 1 The URF in Mol showing the location of the Forge packer system installation

4. Design of multi-filter monitoring piezometers

4.1. Monitoring piezometers

Two borehole monitoring piezometers, each containing 8 filters, were installed horizontally in two boreholes to a depth of 19.9 m. Each filter is designed with a small (42x64 mm), single screen to allow an accurate measurement of travel distance between the injection and detection filters, as shown in Figure 2.

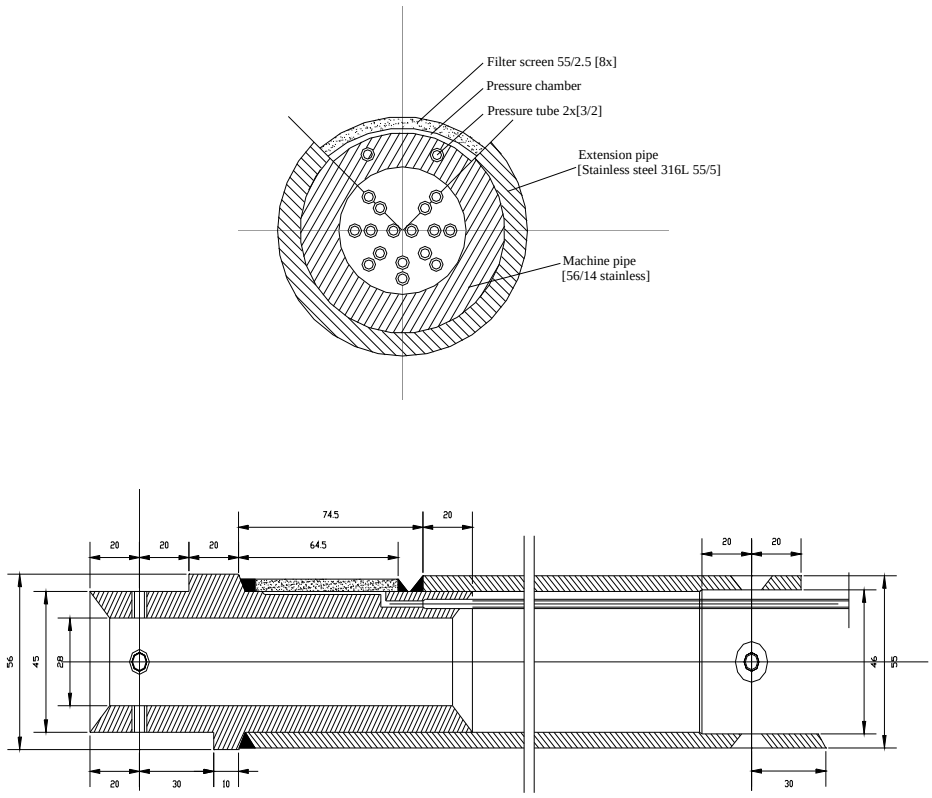

Figure 2 General construction details of monitoring piezometers: end view [top] and typical longitudinal cross-section [bottom]

All filters have dual pressure steel lines to allow for optimum flushing of the system and for controlled injection (Figure 3). The casing tubes contain special orientation lock-in pins located at the centre line of the filters to allow the alignment of the piezometer filters during installation. Other features include the use of AISI 316L stainless steel for the construction of both the pressure lines and the borehole casing and the use of sintered steel Krebsöge filters, with an aperture of 5 microns, for the construction of the piezometer filters.

The piezometer borehole casings have a diameter of 55/45 mm. The ends of the casings contained mini packers to measure the total stress in the clay. The mini packers were filled with water for pressurization. Both mini packers were damaged during the installation of the mega packers and have since stopped functioning.

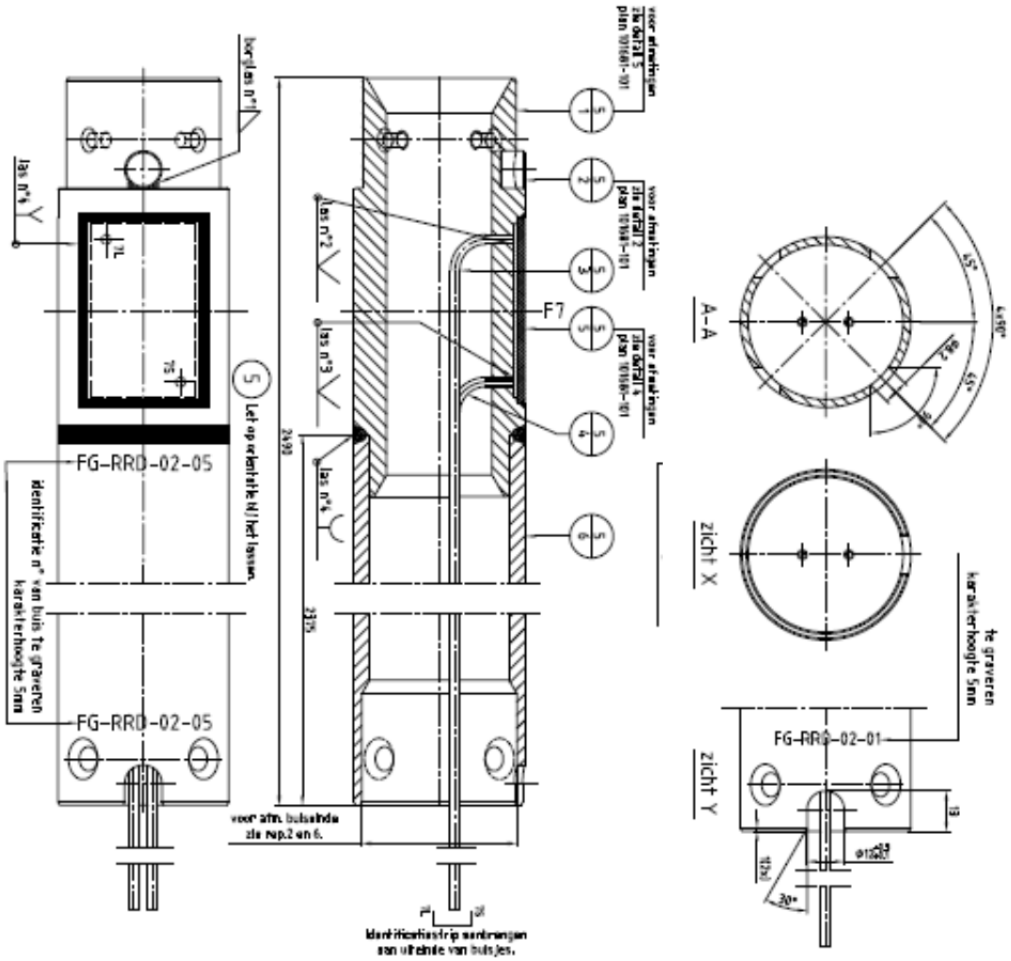

Figure 3 Construction details of monitoring piezometers showing double tubing and lock-in alignment pins

4.2. Data acquisition system

The DAQ system of the multi-piezometer monitoring boreholes uses a Campbell Scientific CR1000 measurement and control module data logger together with a standard computer for data recording and storage. The system is accessed remotely from within SCK•CEN via an intranet connection. A back up copy of the data is stored in a dedicated hard disc and backed up daily by SCK•CEN.

5. Design of mega packers

5.1. General specifications

The mega packer system consists of two identical and inflatable large-diameter packers manufactured by Solexperts in Switzerland. The packers have fixed ends to prevent axial displacement during inflation and deflation. They are inflated using Midel® synthetic ester oil, a biodegradable oil.

The inflatable rubber section contains an inner reinforced rubber layer of 1 cm in thickness and an outer non-reinforced layer of 3 cm in thickness, both made of Nitrile rubber, which is compatible with the Midel® oil used as pressurizing fluid. The metal parts consist of stainless steel 316L for corrosion resistance against the Boom clay host formation. Figure 4 shows one of

the packers during assemblage at Solexperts. The general packer specifications appear in Table 1.

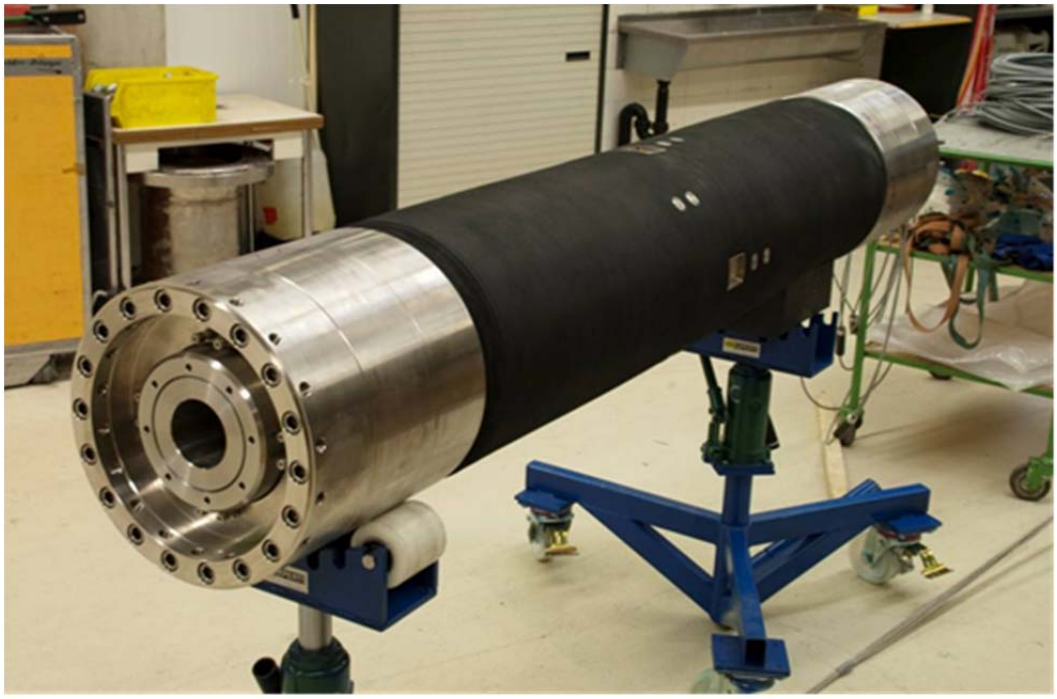

Figure 4 One of the packers during assemblage at Solexperts

Table 1: General packer specifications

Packer type	Fixed end
Dimensions	
Rubber length	1490 mm
Total length	2180 mm
Diameter deflated	355.6 mm
Diameter range	340 mm – 430 mm
Working conditions	
Temperature range	0 – 40°C
Maximum inflation pressure at Ø380 mm	120 bar
Maximum inflation pressure at Ø400 mm	80 bar
Materials	
Metal parts	SS 316 L
Rubber type	Nitrile
Inflation medium	Midel® 7131 Oil
Weight (deflated, filled with Midel® Oil)	~680 kg

5.2. Instrumentation

The middle of each packer is instrumented at six hour-clock locations, labeled clockwise from 12:00 to 22:30. The following sensors are installed in the rubber sleeves of the packers:

- LVDT displacement transducers;
- Pore water pressure; and
- Total pressure.

The sensors are built-in in the rubber sleeves of the packers. This means that the sensors are in direct contact with the clay and are not affected by the stiffness of the packers. The location of the built-in sensors appears in Figure 5.

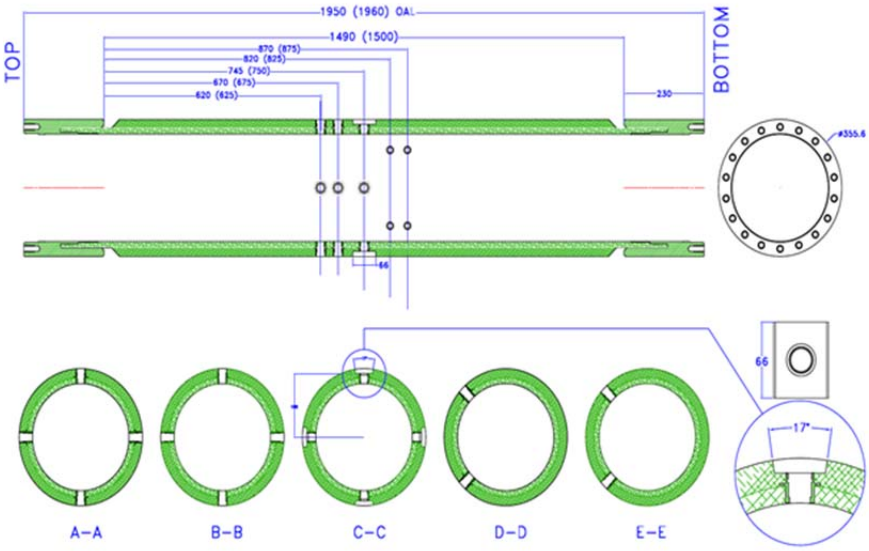

Figure 5 Location of sensors in packer sleeve

A cross-section of one of the packers, showing the location and labeling of instrumentation and pressure lines, appears in Figure 6.

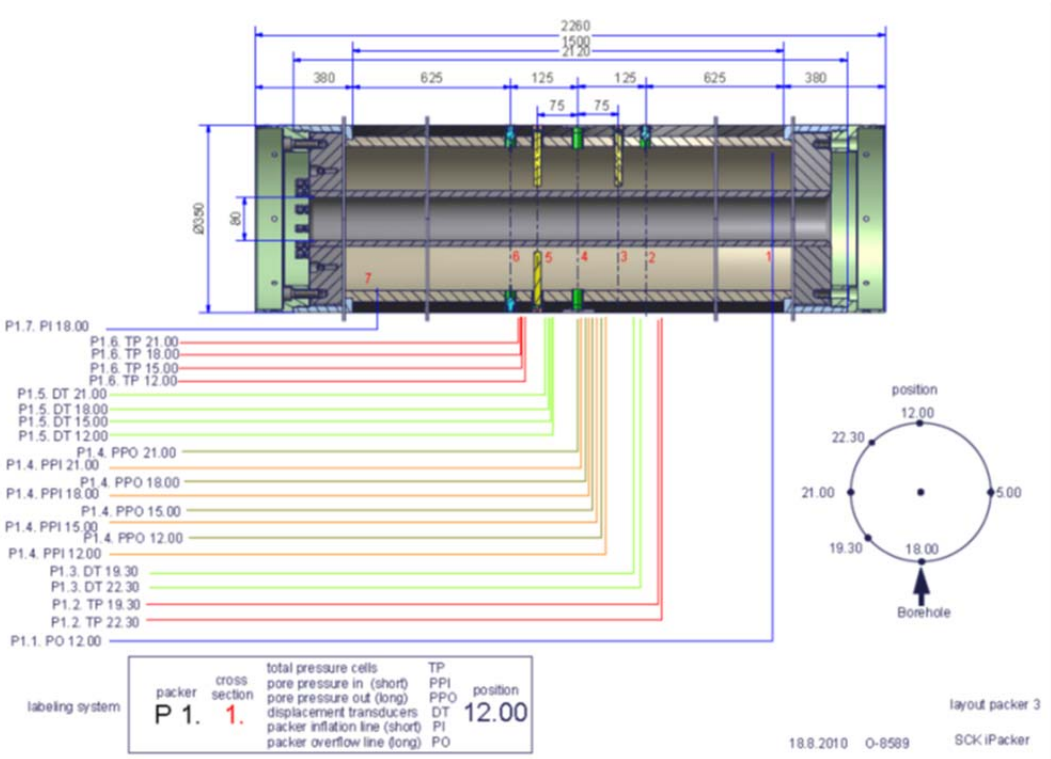

Figure 6 Cross-section of one of the packers showing instrumentation, pressure lines and labelling

5.3. Packer design performance

The packer performance-characteristic curves for both unconfined and confined inflation conditions appear in Figures 7 and 8, respectively. The performance curves show the maximum inflation pressure as a function of inflated diameter. The maximum working pressure of the packers is 120 bars for a confined diameter of 380 mm and 80 bars for a diameter of 400 mm.

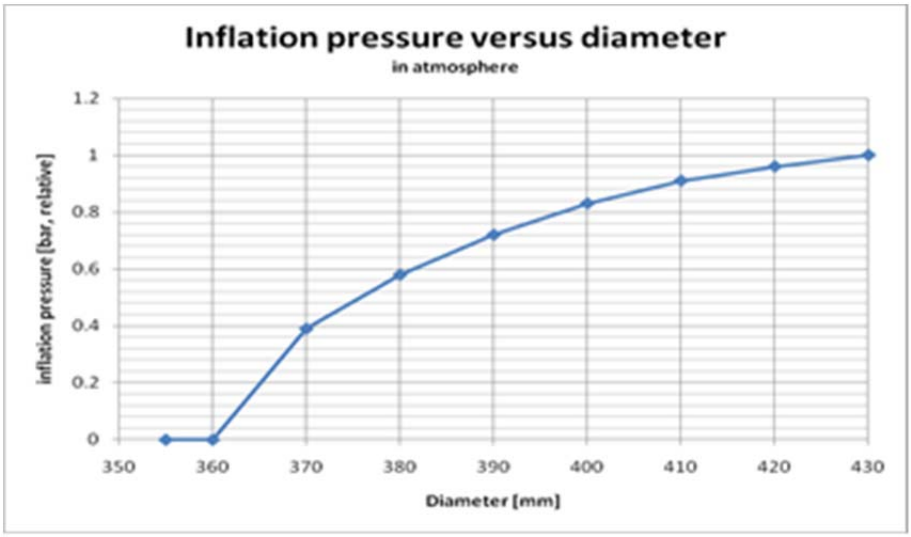

Figure 7 Packer inflation pressure in air

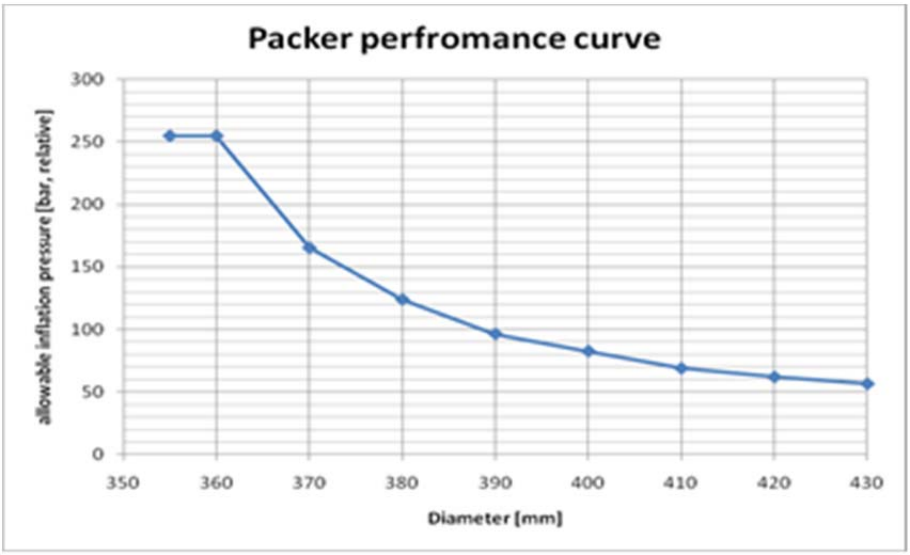

Figure 8 Packer allowable inflation pressure under confinement

5.4. Interval injection and detection filters

The packers are connected by three interval sections, as shown in Figure 9. The interval sections are labelled Interval 1, 2 and 3 and contain both injection and detection filters, as follows:

- Interval 1 is located at the end of packer 1 and contains four injection and four detection filters;
- Interval 2 separates the two packers and contains four injection and eight detection filters; and
- Interval 3 connects packer 2 to the casing and has four injection and four detection filters.

Both the injection and the detection filters have openings located at the four orthogonal clock positions of 12:00, 15:00, 18:00 and 21:00, as shown in Figure 9. The injection filters have openings of 60° while the detection filters have smaller 15° openings.

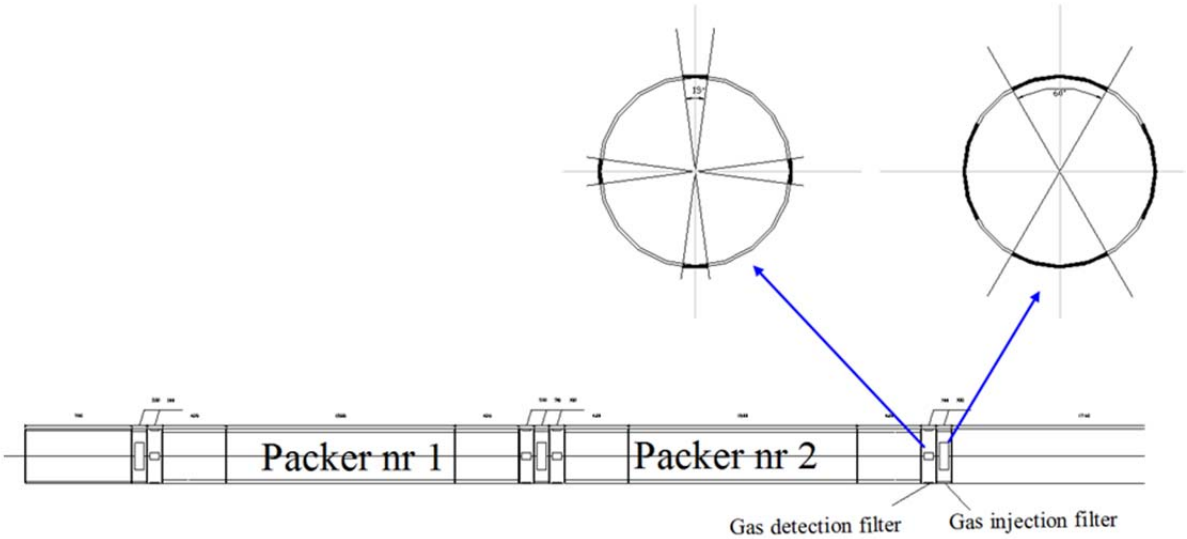

Figure 9 Detection and injection filters installed at Intervals 1, 2 and 3 of the mega packers

The end of Interval 1 is extended with an end tube of 700 mm in length in order to minimize the disturbance zone around the deepest packer caused by the drilling operations.

5.5. Extension tubing and coupling

The design and fabrication of the extension (casing) tubing was carried out by SCK•CEN. In total six extension tubes were fabricated using AISI 304 stainless steel (Figure 10). Due to the limited space in the URF, the extension tubes were limited to a maximum of 2.5 m in length.

The extension tubes were bolted together from the inside using a special screw tool key shown in Figure 11. The screw tool key measures 2.315 m in length and fits every extension tube as well as the coupling piece. The coupling piece (Figure 12) joins the packer system to the extension casing tubes.

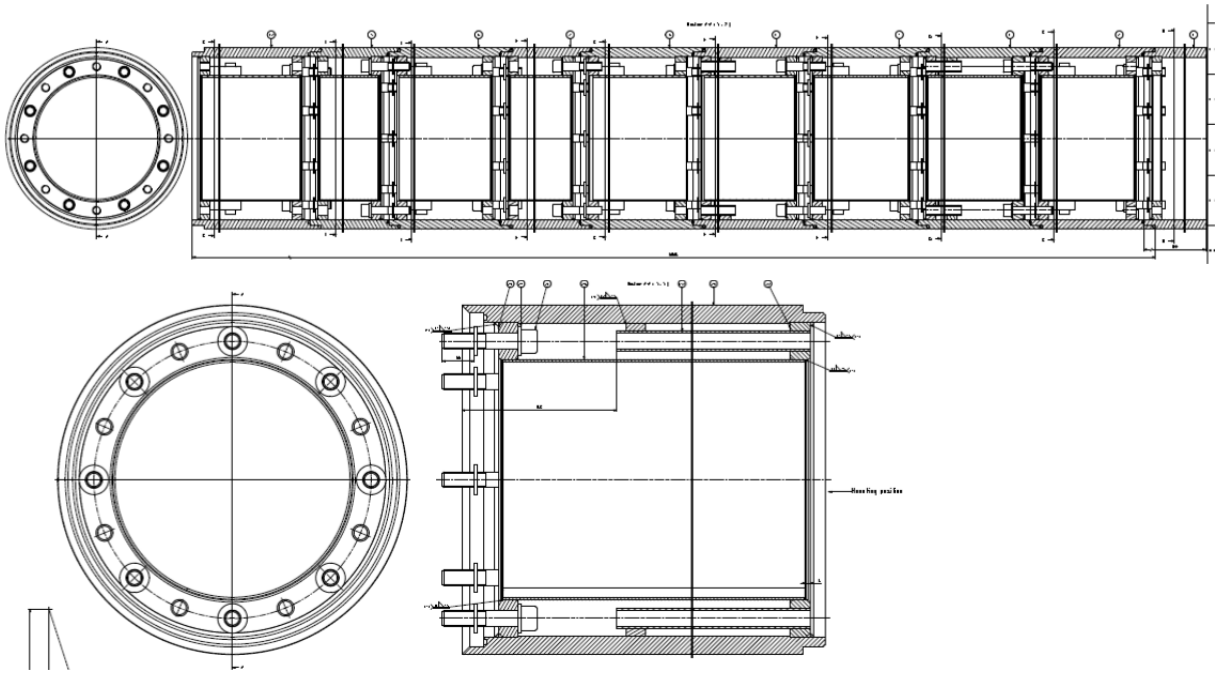

Figure 10 Design details of extension tubing

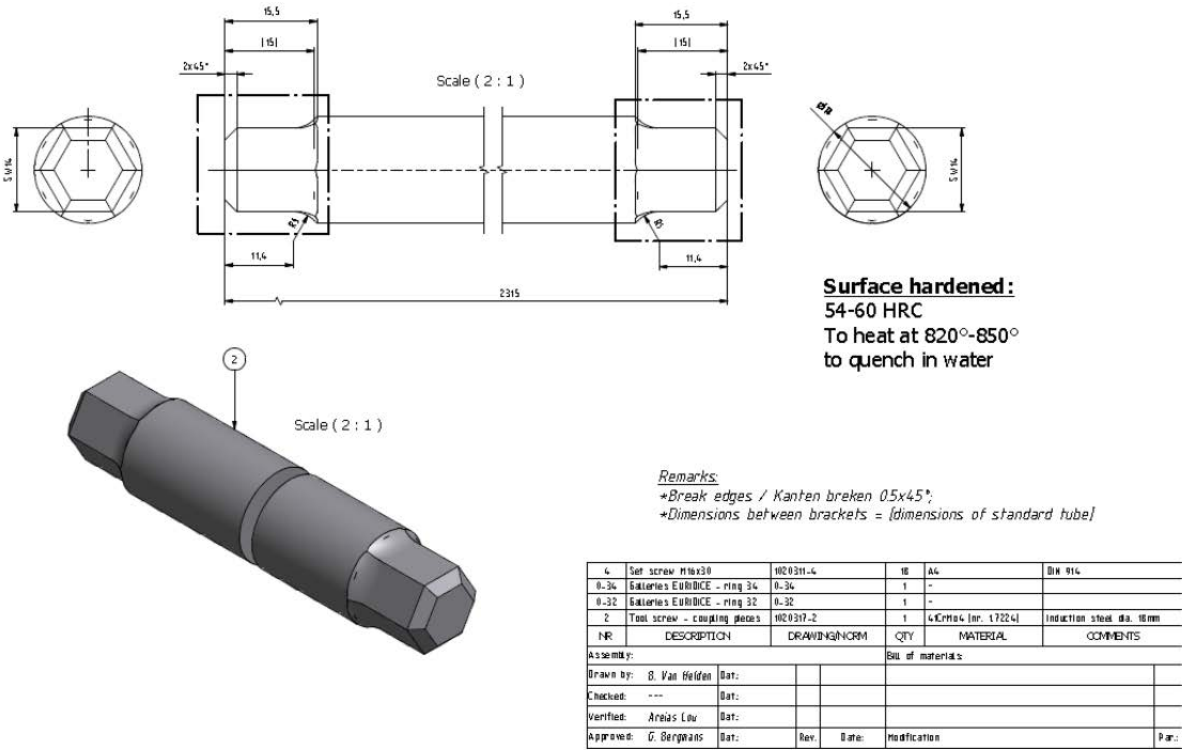

Figure 11 Tool key used to screw extension tubing

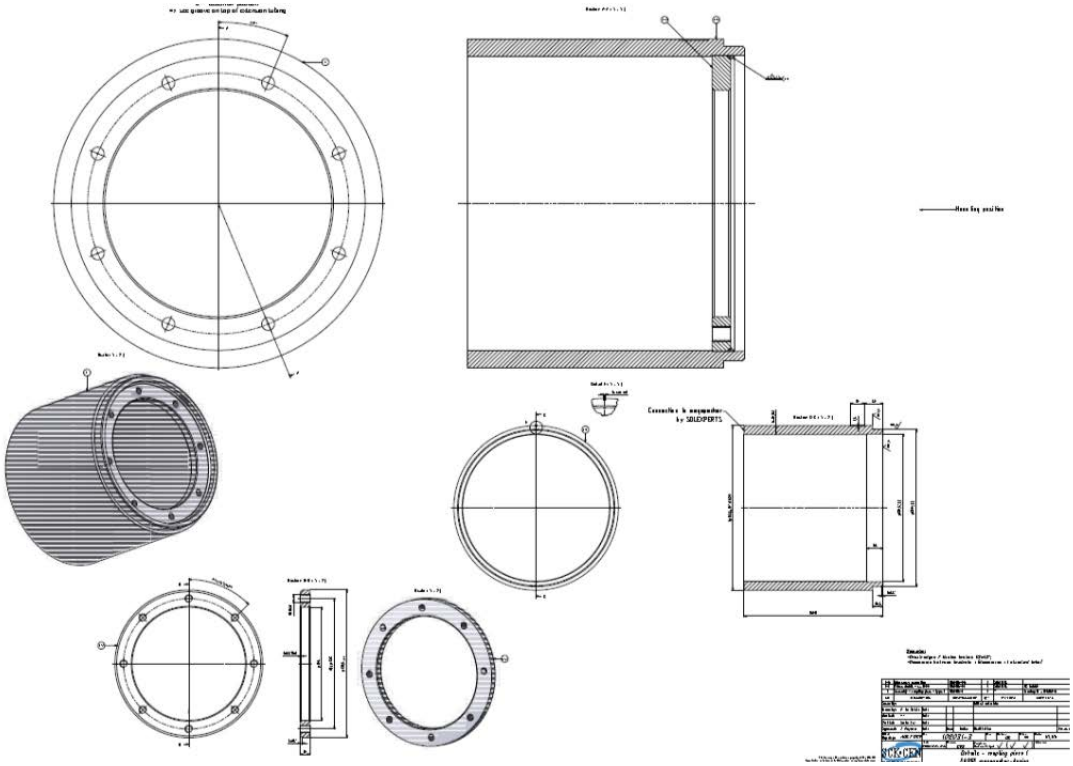

Figure 12 Coupling piece to join packers to extension tubes

The screw tool is guided by specially constructed guide tubes installed inside the casings at each bolt. The guide tubes provide a quick and easy way of locating each bolt during installation. Finally, all joint connections are designed with a double O-ring construction to guarantee the water tightness of the system.

5.6. End piece

The end of the packer system is extended with an end piece (Figure 13) in order to minimize the effects of the excavation caused by the drilling operations. The end piece consists of a closed-end hollow steel casing, as shown.

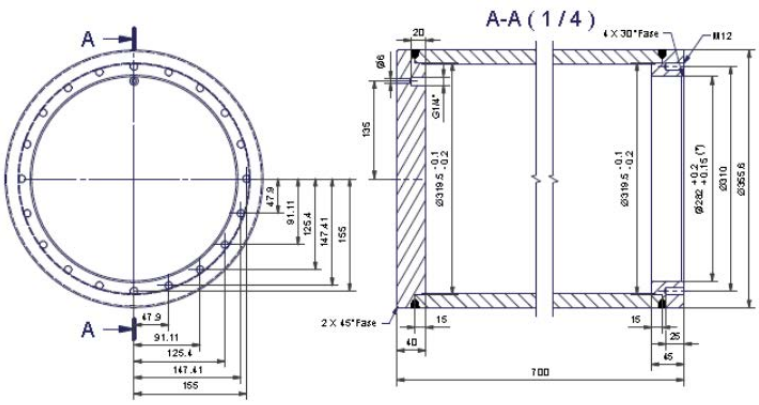

Figure 13 Details of end piece

The length of the end piece measures 70 cm and was estimated based on modelling scope calculations (Table 2 and Figure 14) using the following parameters:

- Packer diameter d=35.6 cm
- Drill hole diameter D=41.6 cm
- Length of packer: 0.38+1.5+0.38=2.26 m
- Length of filter section: 0.1+0.2+0.1 m

Table 2 Simulated scope calculations

Pressure applied on Boom clay (MPa)	0.0~2.0	2.0	2.0~4.0	4.0	4.0~5.5	5.5	5.5~7.0	7.0	7.0~8.0	8.0
Time duration (hours)	2	48	2	48	2	48	2	48	2	48

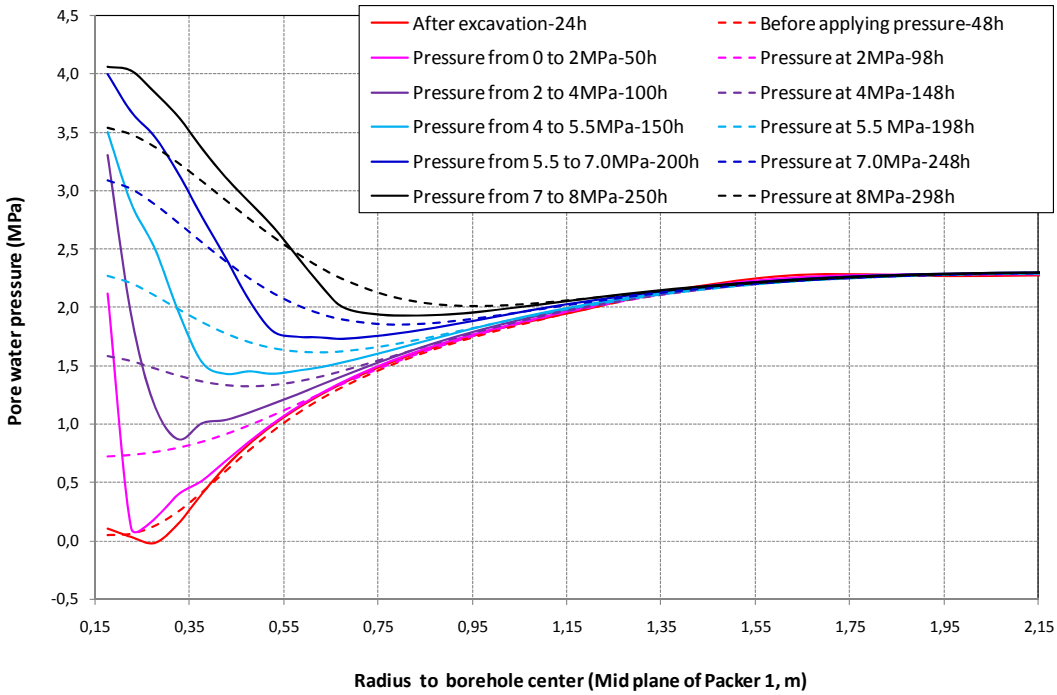

Figure 14 Results of scope calculations to determine length of end piece

The scoping calculations indicate a hydraulic radius of influence of 1.35 m from the centre of the packer, which corresponds to a distance of approximately 70 cm beyond the end of the packers.

5.7. Data acquisition system and channel allocation

The DAQ system for the packers contains 90 channels in total. The channels are used for monitoring pore water pressure, gas pressure, confining total pressure, inflation pressure and displacement. They include 14 spare channels which can be used to perform additional monitoring if needed. The channel allocation of the DAQ system appears in Table 3.

Table 3 Allocation of data acquisition channels

Channel No.	Sensor Name	ID	Sensor Units	Sensor Type
1	DCDC_1			Analog
2	I1.2.GI 12.00		kPa	Gas Injection Line
3	I1.2.GI 15.00		kPa	Gas Injection Line
4	I1.2.GI 18.00		kPa	Gas Injection Line
5	I1.2.GI 21.00		kPa	Gas Injection
6	I1.3.GD 12.00		kPa	Gas Detection Line
7	I1.3.GD 15.00		kPa	Gas Detection Line
8	I1.3.GD 18.00		kPa	Gas Detection Line
9	I1.3.GD 21.00		kPa	Gas Detection Line
10	DCDC 2			Analog
11	P1.4.PP 12.00		kPa	Pore Pressure
12	P1.4.PP 15.00		kPa	Pore Pressure
13	P1.4.PP 18.00		kPa	Pore Pressure
14	P1.4.PP 21.00		kPa	Pore Pressure
15	I2.1.GD 12.00		kPa	Gas Detection Line
16	I2.1.GD 15.00		kPa	Gas Detection Line
17	I2.1.GD 18.00		kPa	Gas Detection Line
18	I2.1.GD 21.00		kPa	Gas Detection Line
19	DCDC 3			Analog
20	I2.2.GI 12.00		kPa	Gas Injection Line
21	I2.2.GI 15.00		kPa	Gas Injection Line
22	I2.2.GI 18.00		kPa	Gas Injection Line
23	I2.2.GI 21.00		kPa	Gas Injection Line
24	I2.3.GD 12.00		kPa	Gas Detection Line
25	I2.3.GD 15.00		kPa	Gas Detection Line
26	I2.3.GD 18.00		kPa	Gas Detection Line
27	I2.3.GD 21.00		kPa	Gas Detection Line
28	DCDC 4			Analog
29	P2.4.PP 12.00		kPa	Pore Pressure
30	P2.4.PP 15.00		kPa	Pore Pressure
31	P2.4.PP 18.00		kPa	Pore Pressure
32	P2.4.PP 21.00		kPa	Pore Pressure
33	I3.1GD 12.00		kPa	Gas Detection Line
34	I3.1GD 15.00		kPa	Gas Detection Line
35	I3.1GD 18.00		kPa	Gas Detection Line
36	I3.1GD 21.00		kPa	Gas Detection Line
37	DCDC 5			Analog
38	I3.2GI 12.00		kPa	Gas Injection Line
39	I3.2GI 15.00		kPa	Gas Injection Line
40	I3.2GI 18.00		kPa	Gas Injection Line
41	I3.2GI 21.00		kPa	Gas Injection Line
42	P1.7 PI 18.00		kPa	Packer Inflation Line
43	P2.7 PI 18.00		kPa	Packer Inflation Line
44	P1.2.TP 22.30	9611	kPa	Total Pressure Cell

Channel No.	Sensor Name	ID	Sensor Units	Sensor Type
45	P1.2.TP 19.30	9643	kPa	Total Pressure Cell
46	DCDC 6			Analog
47	P1.3.DT 22.30	DT2230P1	mm	Displacement transducer
48	P1.3.DT 19.30	DT1930P1	mm	Displacement transducer
49	P1.5.DT 12.00	DT12P1	mm	Displacement transducer
50	P1.5. DT 15.00	DT15P1	mm	Displacement transducer
51	P1.5.DT 18.00	DT18P1	mm	Displacement transducer
52	P1.5.DT 21.00	DT21P1	mm	Displacement transducer
53	P1.6.TP12.00	9646	kPa	Total Pressure Cell
54	P1.6.TP 15.00	9619	kPa	Total Pressure Cell
55	DCDC 7			Analog
56	P1.6.TP 18.00	9592	kPa	Total Pressure Cell
57	P1.6.TP 21.00	9604	kPa	Total Pressure Cell
58	P2.2TP22.30	9635	kPa	Total Pressure Cell
59	P2.2.TP19.30	9576	kPa	Total Pressure Cell
60	P2.3.DT 22.30	DT2230P2	mm	Displacement transducer
61	P2.3.DT 19.30	DT1930P2	mm	Displacement transducer
62	P2.5.DT 12.00	DT12P2	mm	Displacement transducer
63	P2.5.DT 15.00	DT15P2	mm	Displacement transducer
64	DCDC 8			Analog
65	P2.5.DT 18.00	DT18P2	mm	Displacement transducer
66	P2.5.DT 21.00	DT21P2	mm	Displacement transducer
67	P2.6.TP 12.00	9667	kPa	Total Pressure Cell
68	P2.6.TP 15.00	9605	kPa	Total Pressure Cell
69	P2.6.TP 18.00	9629	kPa	Total Pressure Cell
70	P2.6.TP 21.00	9598	kPa	Total Pressure Cell
71	bottom flange		kPa	Analog
72	spare			Analog
73	DCDC 9			Analog
74	Temp Interval 1		¬C	Temperature
75	Temp Interval 2		¬C	Temperature
76	spare1			Analog
77	spare2			Analog
78	spare3			Analog
79	spare4			Analog
80	spare5			Analog
81	spare6			Analog
82	DCDC 10			Analog
83	spare7			Analog
84	spare8			Analog
85	spare9			Analog
86	spare10			Analog
87	spare11			Analog
88	spare12			Analog
89	spare13			Analog
90	spare14			Analog

Table 4 lists the type and number of sensors installed for the monitoring of the packers. These are:

- 12 total pressure
- 36 pore and/or gas pressure
- 12 displacement
- 2 packer pressure
- 2 temperature

Table 4 Installed sensors

Parameter	Displacement	Total pressure	Pore or gas pressure	Packer pressure	Temperature
Supplier	AIP	Keller	Keller	Keller	Solexperts
Type	recti p 12	Serie 7 PAA	X 33	X 33	PT1000
Range	0 - 50 mm	0 -150 bar abs	0 - 100 bar abs	0 - 150 bar abs	0-50°C
Signal	0 - 2.5 V	4 - 20 mA	4 - 20 mA	4 - 20 mA	PT 1000
Interval 1			8		
Packer 1	6	6	4	1	1
Interval 2			12		
Packer 2	6	6	4	1	1
Interval 3			8		
Total	12	12	36	2	2

The DAQ system as well as pressure control unit are mounted in a steel cabinet (Figure 15). The DAQ system consists of the following main components:

- 10 Single board interfaces with the following specifications:
  - 8 16 bit analog channels with overvoltage protection
  - Power supply; 24 V for sensors, 2.5 V for PT 1000 temperature sensors
  - Voltage signals: 0 - 2.5 V; 0 – 5 V: 0 – 10 V
  - Current signals: 0 – 20 mA; 4 – 20 mA (active or passive)
  - Temperature: PT 1000
  - Linear potentiometer: displacement sensor
- Watchdog, control device for DAQ system
- Industrial PC
- Monitor screen

The pressure control unit houses the visual pressure gauges, which are connected to the various filters by a dual-line valve system, as shown in Figure 15.

Figure 15 DAQ system [left pannel] and pressure control unit [right panel] during testing at Solexperts

The DAQ system includes a computer-controlled measuring and recording system with a visual readout display. The packers are connected to a control unit equipped with manometer pressure readout gauges fitted with dual tubing Swagelok® valves. Besides controlling the pressure, the valves can be used for injection and purging of the lines. The control unit connects each pressure line in the packers enabling a direct control of pressures during inflation and deflation of packers. A full view of the DAQ system during control tests appears in Figure 16.

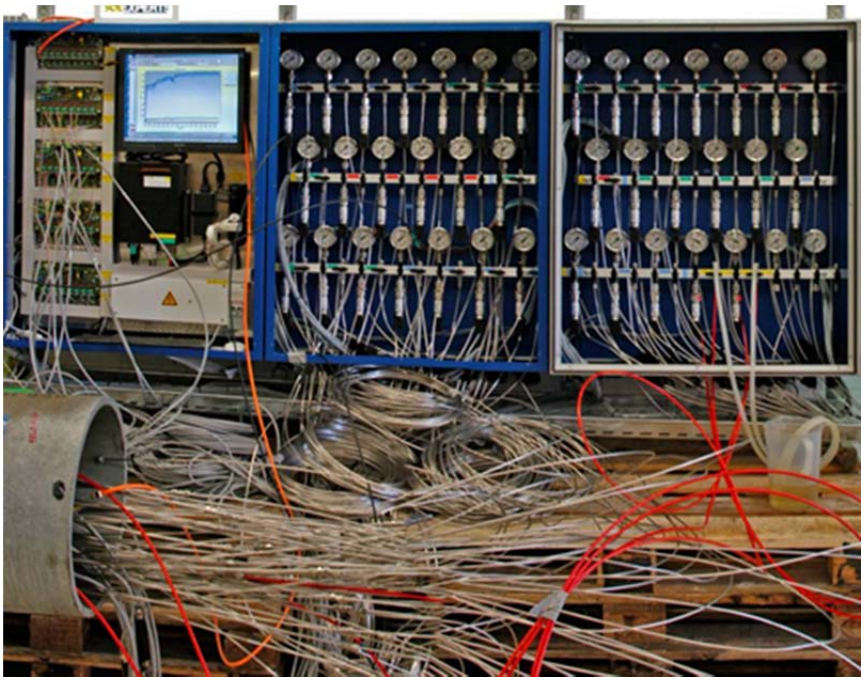

Figure 16 Full view of DAQ and control unit systems during tests at Solexperts

The DAQ system is remotely accessible via an intranet connection. The measurement data is uploaded daily to an internal server accessible via the intranet network of SCK•CEN where the data is permanently stored and backed up daily.

5.8. Packer system quality control and performance tests

After construction and assemblage, the packers and accessory components were fully tested at Solexperts before delivery to HADES. The performance and quality control tests included testing the DAQ and control unit systems as well as the calibration of all sensors installed in the packer system. Figure 17 shows the packer system during control tests at Solexperts.

Figure 17 Assembled packers and flange details ready for full-scale tests

The control tests consisted of the following four phases:

- Phase 1: Behavior of packers under atmospheric conditions;
- Phase 2: Functioning and performance of individual packers under different inflation pressures;
- Phase 3: Tightness of joints and intervals; and
- Phase 4: Full-scale tests to test working of entire system.

When necessary, repairs were performed on the system where indicated by the test results. A description of the tests and results appears below.

Phase 1 Packer behaviour at atmospheric conditions

Objective:
- Determination of inflation pressure versus packer diameter under atmospheric conditions (packer not in a test tubing)
- Displacement sensor calibration

Test layout:
- Use of suction pump for 340 mm test (before initial filling with Midel Oil)
- Packer inflation using Midel Oil,
- Measurement of oil volume for each step
- Monitoring of displacement sensors on packer sleeve, packer inflation pressure and temperature
- Manual measurement of packer diameter
- Displacement sensor calibration by calibration rings (diam. 370, 390 and 410 mm)
- Packer under suction-> diameter versus underpressure

	Packer	Packer diameter [mm]	Duration [hrs]	
Test 1.1	Packer 1	340	1	
	Packer 1	350	1	
	Packer 1	360	1	
	Packer 1	370	1	
	Packer 1	380	1	
	Packer 1	390	1	
	Packer 1	400	1	
	Packer 1	410	1	
	Packer 1	420	1	
	Packer	Packer diameter [mm]	Duration [hrs]	
Test 1.2	Packer 2	340	1	

Phase 2 Performance of packers under inflation pressures 40-80 bar in confined cylinder of diameter 395 mm

		Packer 1	60	395	8
		Packer 1	80	395	48
	Test 2.2	Packer 2	40	395	8
		Packer 2	60	395	8
		Packer 2	80	395	48
	Total				**ca. 1 week**

Phase 3 Interval tests

Objectives:
- Tightness test of pore pressure chambers
- Tightness of interval joints

Test layout:
- Short Test Tubing equipped with O-rings
- Connection of hydraulic lines to packer system control panel
- Connection of pore pressure sensors to DAS
- Monitoring temperature and pore pressure sensors
- Gas injection pressure up to 80 bar

		Interval Pressure [bar]		Minimal Duration [hrs]
Test 3.1 Interval 1, water		60		10
Test 3.2 Interval 2, water		60		10
Test 3.3 Interval 3, water		60		10
Test 3.1 Interval 1, gas N2		80	100 bar	10
Test 3.2 Interval 2, gas N2		80		10
Test 3.3 Interval 3, gas N2		80		10
Total				**2 - 3 Days**

Phase 4 Full system check in presence of SCK•CEN

Objectives:
- Compatibility of all system components
- Feasibility of assembling procedure
- Function check of all sensors and the data acquisition system
- Tightness:
  - Interval 1 (bottom)
  - Interval 2 (between packers)
  - all lines and fittings
  - packer system control panel
- Gas breakthrough

Test layout:
- Long Test Tubing (length 5.5 m; diameter 365 mm)
- Packer Inflation using Midel Oil
- Connection of all hydraulic lines to packer system control panel
- Connection of all sensors to DAS
- Monitoring of all sensors
- Saturation of pore packer chambers
- Deflation of packer 1; deflate packer 1 measure the volume of extracted versus dimater and pressure (until suction)

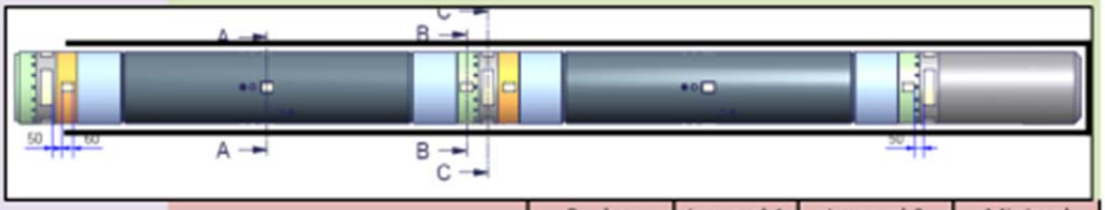

	Packer Inflation Pressure [bar]	Interval 1 Pressure [bar]	Interval 2 pressure [bar]	Minimal Duration [hrs]
Test 4	40	10	10	5
	40	20	20	5
Then stepwise increase (2 bar) in interval 1, until pressure response is observed in interval 2	40	22; 24; 26 etc.	20	each step around 1 hr
	60	20	20	5
	60	40	40	5
Then stepwise increase (2 bar) in interval 1, until pressure response is observed in interval 2	60	42; 44; 46 etc.	40	each step around 1 hr
	80	10	10	12
	80	20	20	12
	80	40	40	12
	80	60	60	12
Then stepwise increase (2 bar) in interval 1, until pressure response is observed in interval 2	80	62; 64; 66 etc.	60	each step around 1 hr
Total				**ca. 1 week**

PROJEKTNAME:	**Mol Belgien**		
KUNDE:	**SCK/CEN Purchase Division**	**OFFERT-NR.:**	
ADRESSE:		**AUFTRAGS-NR.:**	☐ intern, Nr.: I - ..... ☒ extern, Nr.: 2030 .....
PROJEKTLEITER:	**TF**	**BL-/R-NR.:**	
PRODUKTIONSLEITER:	**SI/FP**	**BESTELLDATUM:**	
SACHBEARBEITER:	**FP**	**LIEFERDATUM:**	
BEMERKUNGEN:			

ALLGEMEINER TESTBESCHRIEB / TESTLAYOUT

Test nach Testplan Thomas Fierz vom 27.01.11 mit Rücksprache bei Änderungen des Testplans mit TF

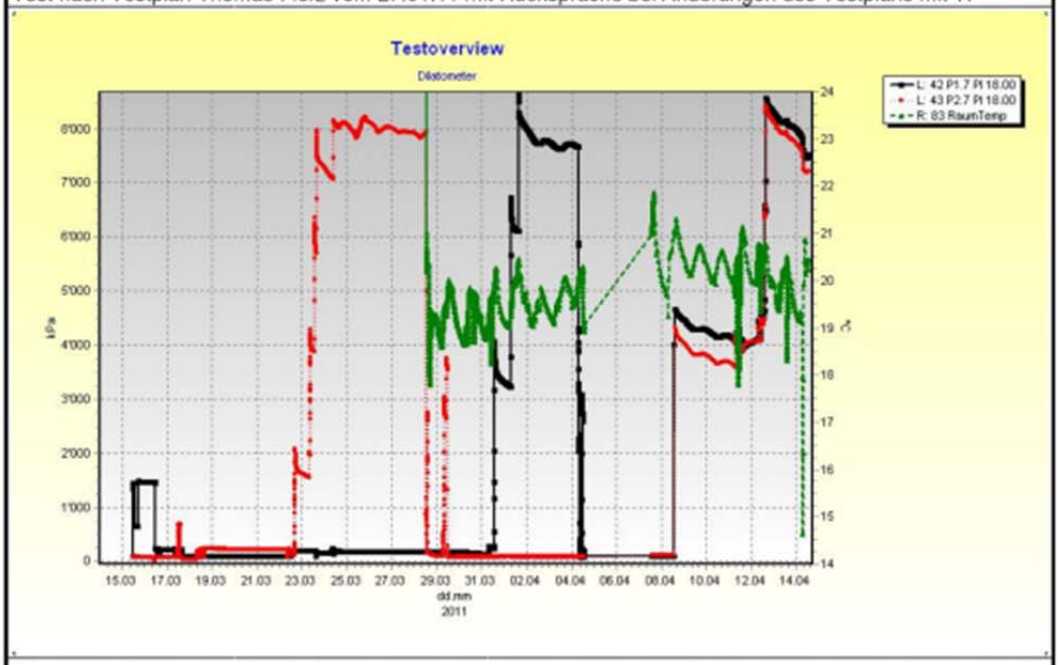

Erstellt: AK Freigabe: HB

TESTPROTOKOLL

Blatt ..... von .....

DATUM	ZEIT	TESTEREIGNIS	WER
14.03.11	14:10	Packer1 filled with N2 10 Bar. Control all connections with Leak spray.	
	16:00	Connect Packer lines in the Cabinet to PC	
15.03.11	11:00	Vacuum test	
		P1 4PP 12:00	
		P1 4PP 15:00	
		P1 4PP 18:00	
		P1 4PP 21:00	
	11:15	Packer1 10 Bar filled with N2	
	11:30	Packer1 15 Bar filled with N2	
	13:15	Packer1 15 Bar filled with N2 – resume Fittings and Connections are tight	
	13:30	set Packer2 in the Test tubing	
	16:00	Connect Packer lines in the Cabinet to PC	
	16:30	Packer2 filled with N2 15 Bar. Control all Connections with Leak spray.	
	16:45	Packer2 15 Bar filled with N2 – resume Fittings and Lines are tight	
16.03.11	09:00	Vacuum on Packer1 – was connected to Packer2 Port (Labeling was wrong but	
		was corrected by 09:10 from the responsible Person)	
	11:12	Stop vacuum > 40kpa max. possible otherwise Packer deforms massive.	
		See Picture	

	11:18	Packer2 15 Bar filled with N2 – resume Fittings and Connections are tight.	
	11:23	Packer1 blow with N2.Connect Packer1 to the right Port in the Cabinet to PC. Circumference 1305mm is measured at Displacement Transducers.	
	11:32	Circumference at largest Diameter measured by Hand is 1330mm.	
	11:41	Pressure Packer1 is 230kpa/ Circumference 1305mm measured by Transducers.	
	12:30	Pressure Packer1 is 230kpa/ Circumference 1360mm measured by Hand.	
	13:06	Packer1 release pressure.	
	13:21	Inflate Packer1 with Caliber Ring	
	13:32	Deflate Packer Calibration with Caliber not possible with PPI and PPO Plates connected. Disassemble Plates.	
	13:41	Packer 1 inflate with largest Caliber Ring	
	13:45	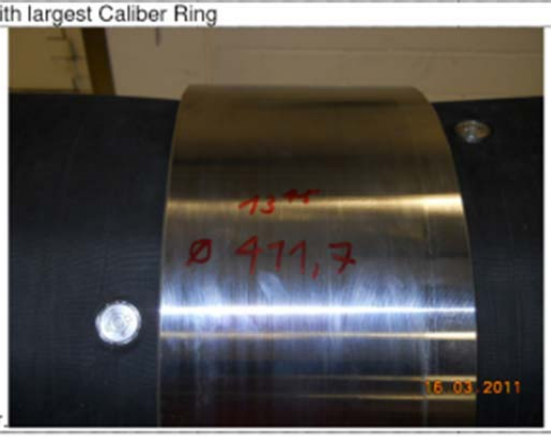 Photo with Caliber.	
	15:37	Packer1 release and inflate with Caliber Ring.	
16.03.11	16:30	Setup change Displacement Sensors to mm	
	17:00	Packer2 connect to PC	

Erstellt: AK *Freigabe: HB*

17.03.11	08:20	Packer2 deflate and inflate with caliber	
	10:00	Caliber discharge and inflate Packer again	
	10:08	Place only 4 Displacement Caliber at the middle of the ring Photo x 10:16	
		Better and more accurate results with 4 Displacement Transducers instead of 6.	
	10:15	Packer1 deflated (sensor 47 to 52)	
	10:34	Packer2 installed in test tube ID 395mm and Inflate to 1 Bar – Verification Displacement Transducers	
	10:40	Deflate packer1 and change Caliber	
	10:41	Deflate Packer2	
	11:03	Packer1 inflate 1Bar with Caliber 392mm	
	11:06	Deflate Packer2	
	11:19	Packer2 inflate 1 bar caliber 392mm	
	11:25	Deflate packer1 and change Caliber	
	11:27	Packer1 inflate 1Bar with Caliber 390mm	
17.03.11	11:37	Packer2 inflate 6 bar Test Tube 395mm	
	11:50	Packer1 inflate 1Bar with Caliber 390mm	
	12:50	Deflate packer1 and change Caliber	
	13:08	Packer1 inflate 1Bar with Caliber 370mm-Foto	
	13:13	Deflate Packer2 in Test Tube 395mm	
	13:26	Packer2 inflate 6 bar Test Tube 395mm	
	13:34	Patrick nock on Caliber Packer1	
	13:49	Deflate packer1 and change Caliber	
	13:52	Packer1 inflate 1Bar with Caliber 370mm	
	14:29	Deflate packer1 and change Caliber	
	14:31	Deflate packer1 and change Caliber	
	14:54	Deflate Packer2	
	15:35	Packer1 inflate 1Bar with Caliber 370mm	
	15:40	Deflate packer1 – Caliber Test series is done	
	16:22	Packer2 Vacuum Test to 340mm Diameter	
	16:44	Vacuum 40kpa	
		Circumference packer2 1095mm equal 348mm AD. Displacement Transducer	
		Moving backwards - more vacuum give inconsistent deformation of the packer.	
		Scan rate set to 30min. photo at 16:50 – 17.03.11	
		Higher vacuum have no positive or helpful effect to detect minimum OD of packer.	
18.03.11	07:14	Packer2 Vacuum test completed. Circumference packer2 1115mm	
	08:25	Expand Packer2 in caliber 370mm	
	08:43	Deflate Packer2 and rotate 90°	
	09:43	Expand Packer2 in caliber 370mm	
	10:32	Deflate Packer2 and rotate 90°	
	10:35	Expand Packer2 in caliber 370mm	

Erstellt: AK *Freigabe: HB*

	11:13	Deflate Packer2 and rotate 90°	
	11:21	Expand Packer2 in caliber 392mm	
	12:32	Deflate Packer2 and rotate 90°	
	12:35	Expand Packer2 in caliber 392mm	
	13:12	Deflate Packer2 and rotate 90°	
	13:18	Expand Packer2 in caliber 392mm	
	13:53	Deflate Packer2 and rotate 90°	
	13:59	Expand Packer2 in caliber 411.7mm 1.5Bar	
	14:41	Deflate Packer2 and rotate 90°	
	14:47	Expand Packer2 in caliber 411.7mm 1.5Bar	
	15:56	Deflate Packer2 and rotate 90°	
	16:10	Expand Packer2 in caliber 411.7mm 1.5Bar	
		Scan rate 30 minutes	
21.03.11	07:05	Deflate Packer dismantle caliber	
	08:26	Measure diameter with caliper gauge	
		Front horizontal: 365.5mm	
		Back horizontal: 364.4mm	
		Front vertical: 363.7mm	
		Back vertical: 363.7mm	
	08:30	TP cells adjusted	
22.03.11	09:00	Measure diameter with caliper gauge	
	10:33	Packer Diameter 319mm	
	15:15	Saturate Packer2 with Oil. Packer takes 78kg Oil.	
	16:45	Pressurize Packer2 with oil to 20 Bar	
23.03.11	08:45	Packer2 40Bar	
	13:50	Packer2 60Bar	
	14:50	Measure diameter Packer1 with caliper gauge	
	15:45	Packer2 80Bar	
	15:55	Expand Packer1 in caliber 370mm	
23.03.11	16:15	Packer2 in test-tube 370mm have at 12:00 25mm and 18:00 15mm offset in Front	
		And in the back of the Packer. This means the packer is not centering by itself	
		With 80 Bar pressure.	
24.03.11	07:36	Expand Packer1 in caliber 390mm with N2	
	08:15	Expand Packer1 in caliber 420mm with N2	
	10:18	Packer2 inflate 80Bar	
	11:32	Packer2 in 395mm Test-tube at 80Bar take 113kg oil	
28.03.11	11:15	Inflate Interval 1.2 and 1.3 with Water to 80 Bar	
	13:35	Time Change	
	13:36	Deflate packer2 and center it in the Test-tube 395mm	
	14:43	Inflate Packer2 centered in the Test-tube 395mm to 26 Bar	
	15:35	Packer2 H-Diameter 391.95mm V-Diameter 394.62mm	
	15:50	Packer1 Intervall1 inflate to 61.8Bar	
29.03.11	07:24	Release Intervall1 Packer1	
	09:02	Rotate Packer2 90° and inflate to 30bar	
	09:35	Packer2 27.8Bar H-Diameter 391.95mm V-Diameter 392.21mm	
	09:39	Dismantle test flange from packer1	
	10:00	Dismantle Packer1 (screws are not fully tight)	

	10:08	 Marks from Screws due to High pressure Test with Flange 	
29.03.11	12:00	Inflate packer2 to 38Bar	
	12:54	Packer2 H-Diameter 394.29mm V-Diameter 392.3mm Pressure at 35Bar	
	13:00	Deflate packer2	
31.03.11	11:20	Inflate Interval 3 to 40Bar	
	13:40	Deflate Interval 3	
	14:00	Inflate packer1 to 40 Bar (oil)	
	14:10	Inflate Interval 3 to 80Bar (water)	
01.04.11	07:20	Inflate packer1 to 60 Bar (oil)	
	09:00	Deflate Interval 3	
	15:10	Inflate packer1 to 80 Bar set scan rate to 30min. to perform 48h test.	

04.04.11	07:21	Deflate packer1 and measure the volume outflow for each step	
	07:30	-60Bar 260ml	
	07:40	-40Bar 360ml	
	07:46	-30Bar 180ml - measure Displacement sensors	
		-20bar 3.4ml	
	07:53	Packer1 pressure 3233.06kpa measure H-Diameter 394.5mm V-Diameter 392.24mm	
	10:30	Drain 14 Liter oil and rotate the test tube ID395mm 90°	
	10:40	Inflate Packer1 to 30 Bar	
	11:00	Packer1 inflated to 30 Bar	
	12:05	Packer1 pressure 2699.37kpa measure H-Diameter 392.02mm V-Diameter 394.406mm	
	12:15	Deflate packer1	
	13:00	Disassemble Electric lines from PC	
		Deflate packer1 and drain approx 25lt. of oil	
		Install Test-tube Id 366mm	
05.04.11	07:00	Install Test-tube	
		Diameter Packer1 362mm	
	09:45	Start assembling Packer1	

06.04.11	11:00	Check all Lines according to labeling system A-2030 with nitrogen Lines I.2.3GDI 15:00 / I.2.3GDO 15:00 Lines I.2.3GDI 21:00 / I.2.3GDO 21:00 Has to be changed on the List Packer1 and Packer2 are connected according to the labeling system Number 15:00 / 21:00 wrong according to Labeling system All lines are tested and corrected according to labeling system	
07.04.11	07:00	Assembling till 17:15	

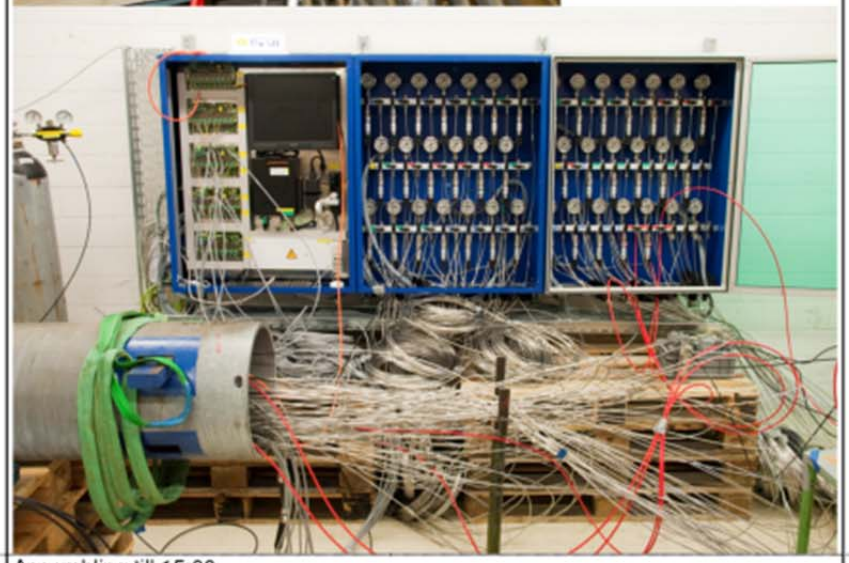

08.04.11	07:00	Assembling till 15:00	
	13:35	Inflate packer1 to 50bar	
	14:10	Inflate packer2 to 50bar	
11.04.11	06:30	Inflate packer2 to 40 bar	
	06:50	Vacuum interval2	

Erstellt: AK *Freigabe: HB*

	07:10	Vacuum interval1	
	07:51	Inflate interval2 with co2 to 10 bar	
	08:11	Stop vacuum on interval1	
	08:59	Vacuum interval2	
	09:13	Stop vacuum on interval1	
	09:16	Inflate interval1 with co2 to 8 bar	
11.04.11		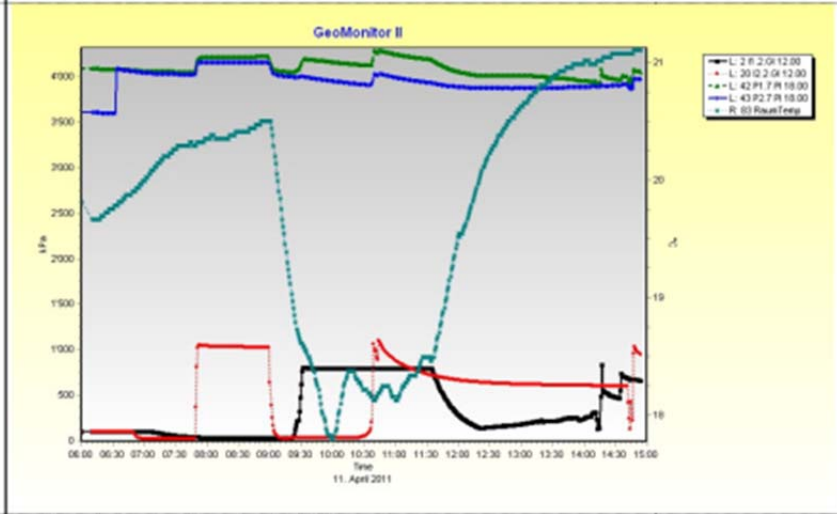	
11.04.11	10:23	Inflate interval2 with water to 10 bar	
	10:39	interval2 10 bar	
	11:34	Start Vacuum interval1	
	12:20	Vacuum interval1 achieved	
	12:21	Inflate interval1 with water to 8 bar	
	14:30	interval1 water 8 bar pressurized	
	14:47	deflate interval2 for check if there is still air in the line. No air detected. Inflate with water to 10 bar	
12.04.11	07:40	Inflate Interval2 to 20bar	
		Note: approximately 25lt. of oil was needed to bring the Packers up to 40 Bar in the Test tube Id 366 mm	
	09:45	Release interval2 and check for air. Nothing detected. Inflate to 25 Bar.	
	10:10	set all PP to vacuum	
	13:10	Release vacuum on pp 21:00 interval2 and set new to control.	
	13:18	Inflate interval2 with water to 24 Bar	
	14:15	Inflate packer1 and 2 to 60 Bar	
	14:38	Inflate interval2 with water to 40 Bar	
	16:05	Inflate packer1 and 2 to 60 Bar	
	16:10	Inflate interval2 with water to 60 Bar	
13.04.11	09:00	Change Labels in cabinet. Some Labels has to be changed according to have the right ports Connected.	
		See test protocol 6.04.2011 at 11:00	
		All lines and ports are connected and verified.	
18.04.11	10:00	Release interval pressure 1 and 2 to 15bar	
	11:00	Release vacuum PP packer1	
	12:58	Release 1 and 2 to 30 bar	
	13:05	Set interval 2 18bar	
	13:17	Set interval 2 20bar	
	13:21	Set interval 2 25bar	

Erstellt: AK *Freigabe: HB*

	13:30	Set interval 2 30bar	
	13:44	Set interval 2 35bar	
	13:51	Set interval 2 40bar	
	14:00	Set interval 2 45bar	
	14:06	Set interval 2 50bar	
	14:31	Set interval 2 55bar	
19.04.11	07:35	Accidently release some pressure in interval 2	
	07:38	Set interval 2 60bar	
	14:48	Set interval 2 65bar	
20.04.11	08:47	Set interval 2 70bar	
21.04.11	12:57	Set interval 2 75bar	
02.05.11	13:54	Set interval 2 to ATM H2O Volume 937ml drained	
	14:16	Packer2 to 10bar	
	14:36	Interval 2 to 20bar	
	14:45	Packer2 to 10bar	
	15:01	Interval 2 to 41bar	
	15:37	5.7 liters oil drained from packer 2	
	15:50	6 liters oil drained from packer 2	
	16:25	Interval 2 drained out	
	16:30	Drain the entire system over night	
03.05.11	07:00	Remove system out of test tubing	

6. Installation

6.1. Multi-filter monitoring boreholes

Two horizontal boreholes were drilled in December 2010 and January 2011for the installation of the multi-filter monitor piezometers, approximately 6 months prior to the installation of the mega packers. They were installed in horizontal boreholes drilled with a diameter of 75 mm to a depth of 19.9 m, as shown in Figure 18. The piezometers were connected to the monitoring system on the 7th of January 2011. The boreholes were drilled nearly parallel and at a distance of approximately 40 cm to the packers. The monitoring piezometers are labeled Monitoring Borehole 1 and 2, as shown in Figure 19.

The piezometers are designed with small filter screens and are installed facing the packers in order to accurately measure the travel distance between the monitoring filters and the mega packers. In the case of the horizontal monitoring piezometer located to the left of the packers, installed in Ring 32, the filters point horizontally to the injection and detection filters of the mega packers. Similarly, the filters in borehole piezometer number 2, the vertical piezometer located under the packers, installed in Ring 33, point to the filters located at the bottom of the mega packers located at the 18 o'clock position.

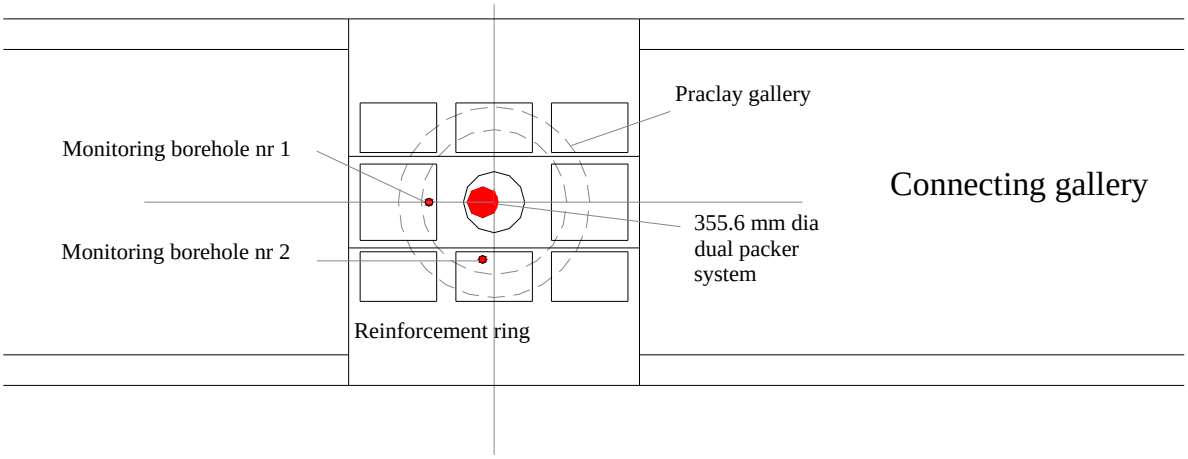

Figure 18 Location plan showing location of monitoring piezometers and mega packers

Figure 19 Computer-generated drawing of as-built mega packer system installation

Each of the multi-filter monitoring piezometers contains eight detection filters, labeled F1 to F8, located at various distances, as shown in Figure 20. The total depth of the monitoring piezometers is 19.9 m. Filters F1 to F7 are located near the inflatable section of the large-diameter packers to monitor the near field hydraulic conditions around the packers. Filter F8 is approximately 11.2 m from the Connecting Gallery and monitors the far field of the packer system.

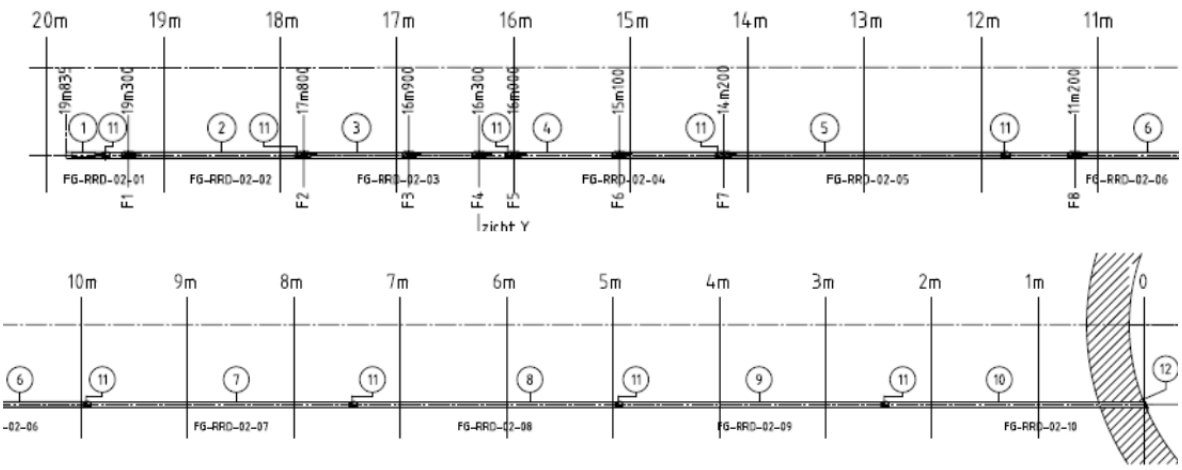

Figure 20 General layout of the multi-filter monitoring piezometers

6.2. Mega packers

6.2.1. Transport of packers and extension tubing to the URF

The packers and extension tubing were transported to the URF using a specially built carriage car, as shown in Figure 21.

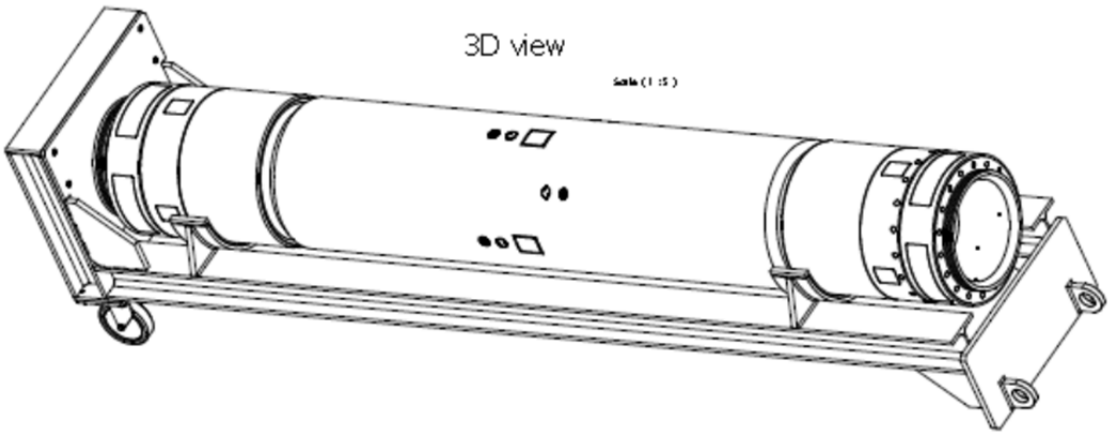

Figure 21 Carriage tool used to transport packers and extension tubing to the URF in HADES

Drilling of large-diameter borehole

The large-diameter borehole was drilled horizontally in the Boom Clay with a final diameter of 402 mm. The borehole was drilled to a depth is 19.5 m. This is 0.95 meters longer than the length of the installed packer installation. The extra depth was necessary to provide storage space for the clay cuttings generated by the sliding action of the packers during installation. Drilling was performed by the ESV EURIDICE drilling crew with assistance from Smet Boring, a Belgian company that specializes in drilling operations. During drilling a survey crew from Geomodus was present to measure and record the orientation and depth of the borehole.

The drilling of the large-diameter borehole was performed in two phases. The first phase consisted of drilling a pilot borehole. This pilot borehole had a diameter of 160 mm and was drilled on the 20th of June, 2011. After drilling, the borehole was allowed to freely converge until the next day before starting the large diameter drilling. The pilot borehole took approximately 8 hours to drill and had the following objectives:

- Create unloading of the clay and allow partial convergence to reduce final convergence of the borehole;
- Provide guidance for drilling the final, large diameter borehole; and
- Reduce total amount of cuttings generated during final drilling.

The second phase consisted of drilling the large-diameter borehole with final diameter of 402 mm. Two crews worked continuously around the clock to complete the borehole in order to minimise the effects of convergence of the clay and to ensure a safe installation of the packer system. The borehole was completed in the morning of the 23th of June, after two full days of drilling. The installation of the packers started immediately after the drilling was completed.

The drilling used a custom-made drilling head fabricated by ESV EURIDICE specifically for this project. The drill head consisted of a twin drill-head construction incorporating a small-diameter drill head at its end and a larger-diameter one placed behind it, as shown in Figure 22.

Both had a conical construction and serrated teeth to cut and pulverize the clay, which facilitated the removal of the cuttings during drilling. The smaller drill head had the same diameter as that of the pilot hole while the larger drill head had a diameter of 402 mm.

Figure 22 Custom-made twin drill head fabricated by ESV EURIDICE to drill the final large-diameter borehole

The Boom Clay is very sensitive when brought in direct contact with free water, which precluded the use of water for drilling. The standard practice at HADES, and the method used for the drilling to install the packers, is to use compressed air. The compressed air is forced inside the hollow drill casing providing cooling for the drill head. As it travels back along the outside of the casing it brings the cuttings along with it. Figure 23 shows the setup during drilling.

Figure 23 Setup during drilling of borehole [left] and finished borehole ready for installation of packer system [right]

The packers were inflated immediately after installation and are being monitored as the convergence of the clay around the packers continues to develop. The clay was still converging around the packers at the time of writing of this report. Also, both the in-situ stresses as well as the pore water pressures had not yet reached equilibrium around the packers, as shown in § Monitoring and Follow up presented later in this report.

6.2.2. Installation of packer system

The packers were installed on the 23th of June, 2011 immediately after the large borehole was completed. An open borehole in the Boom Clay converges relatively quickly when left unsupported. For this installation, the time allocated to install the packers was estimated at approximately 4 to 6 hours, after which the hole will have converged sufficiently to become too narrow for the packers to fit in. To shorten the installation time, the two packers and all the pressure lines were pre-assembled and placed in the PRACLAY gallery before the start of drilling, as shown in Figure 24. The PRACLAY gallery is located opposite to and in the same axis as that of the borehole. For practical reasons, the extension tubes could not be pre-assembled and had to be assembled during installation of the packers.

Figure 24 View of the PRACLAY gallery showing the two packers and pressure lines assembled prior to start of drilling

At the start of the installation, the two pre-assembled packers were pushed into the borehole with the help of overhead pulleys and the hydraulic piston from the drill machine, as shown in Figure 25. The piston of the drill machine was coupled to a metal cover that fitted over the packers in order to prevent damage of the packers during installation. The drill machine was

removed after the insertion of the two packers and a new driving system was installed to push the rest of the system into the borehole.

The system used to install the rest of the system consisted of two 5 ton chain-driven electric hoist frames, as shown in Figure 26. The hoist frames were fixed on either side of the borehole, as shown. The extension tubes were placed on a table in front of the borehole, one by one. Once the pressure lines had been fed through and the tubes were securely bolted together, they were pushed slowly into the borehole using the electric hoist system. The reaction chains were coupled to the end of the tubes by means of a metal beam, which together with the hoist system provided the necessary thrust to push the tubes into the borehole.

Figure 27 shows a view of the URF after installation of the packer system and connection to the DAQ and control unit systems.

Figure 25 Installation of the pre-assembled packers using the piston of the drill machine

Figure 26 Set up showing the electric hoist frames used to push the extension tubes into the borehole

Figure 27 View of the URF showing installed packer [left] and DAQ and control unit systems [right]

6.2.3. Problems encountered during installation of packers

The drilling of the small-diameter pilot borehole was accomplished without major difficulty. During this drilling, a relatively small septaria zone was encountered at 4.5 m depth and an equally small but highly abrasive pyrite zone was encountered at 14.5 m. The pyrite zone required over coring before proceeding further with the drilling. The pilot borehole was finally completed to the depth of 19.5 m.

The drilling of the large-diameter borehole passed through the septaria depth of 4.5 m without major difficulty. At the depth of 14.5 m the borehole encountered the highly abrasive pyrite zone. This abrasive zone caused significant wear to the drill head requiring the complete rebuilding of the cutting blades. After resuming with drilling, the borehole encountered another highly abrasive pyrite zone between approximately 17.5 and 19.5 m.

During retrieval of the drill rods, the drill head became blocked at 18.5 m. The blockage was likely caused by the collapse of the borehole behind the head in the pyrite zone. It is also possible that blocks of pyrite fell into the borehole adding to the blockage. Several attempts were made to free the rods and drill head. During these attempts the drill rods were kept rotating in order to maintain the borehole open and prevent a complete blockage of the drill head and rods, which would result in the total loss of the borehole. While rotating, the rods were pushed back and forth in order to force the drill head through the blocked zone. It required approximately six hours to finally free the rods and head. During this operation, a large cavity was created at the end of the borehole. The size of the cavity was sufficiently large enough to hit both of the nearby multi-filter monitoring piezometers that had been previously installed. In the process, it destroyed the two mini packers and caused a large deviation of the borehole in the last 3 to 4 meters of its depth.

After removal of the drill from the borehole, the packers were successfully installed to a depth of 18.55 m. This is approximately 0.49 m short of the originally planned installation depth but was necessary in order to avoid placing the packers directly in the pyrite zone.

7. Monitoring and follow up

After installation, the packers were filled with Midel® 7131 Oil and pressurized just enough to establish contact with the borehole opening. The initial inflating pressure required to establish contact with the borehole for both packers was approximately 250 kPa. After this pressure was reached, the inflation pressure was closed off. Since then, the packers have been operated on a passive mode, allowing the inflation pressure to change only due to the convergence of the clay.

Packer 1 developed a small leak on the 7th of August 2011, as seen in Figure 28, showing the inflation pressure of the packers with time. Since then, the inflating pressure has continued to recover. Packer 2 experienced pressure losses on 18th August, 2011 and on 2nd February, 5th April and 19th June in 2012. Since then, no pressure loss has been observed in both packers. The inflating pressure of both packers continues to increase but has not yet stabilized, as shown.

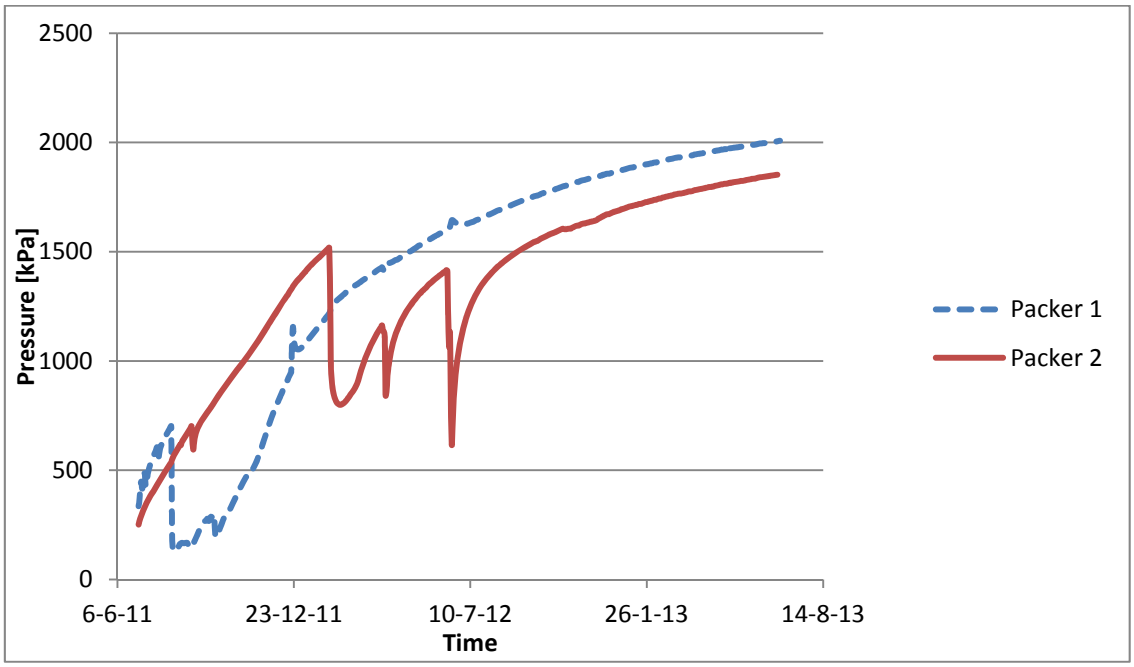

Figure 28 Evolution of inflation pressure of the two packers

The evolution of the pore pressures in the multi-filter piezometers shows a similar trend as that observed for the packers, as seen in Figures 29 and 30 for monitoring piezometer 1 and 2, respectively. The sudden changes in pressure in filter 7 of monitoring borehole 1 and in filters 6 & 7 in borehole 2 are due to manual intervention performed to de-air the pressure lines in these filters. Like the inflating pressures of the packers, the pore pressures have also not yet stabilized, suggesting that the disturbed area around the packers created during installation has not yet fully recovered.

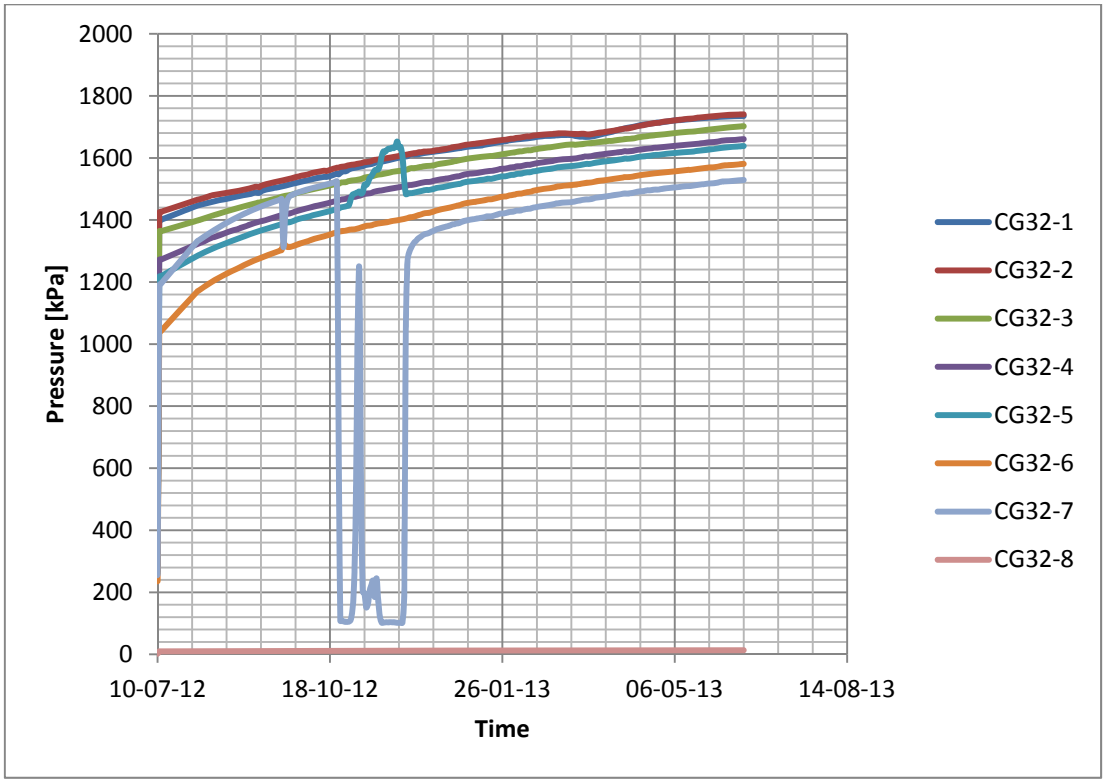

Figure 29 Evolution of pore water pressures in monitoring piezometer 1

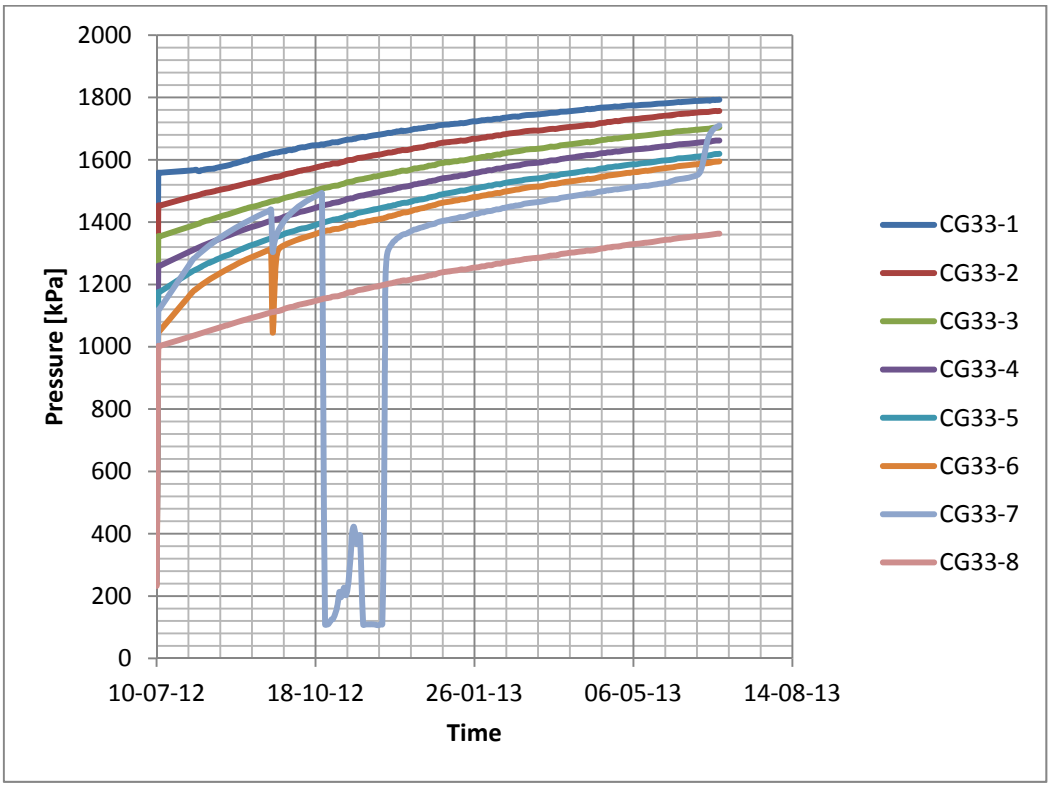

Figure 30 Evolution of pore water pressures in monitoring piezometer 2

On the 20th of December 2011 a special Conax feed through adaptor was installed at the end of the multi-filter piezometer number 1 to close off both the borehole casing and the pressure line of the damaged mini packer in order to prevent clay and water from the Boom Clay to enter the casing and the URF. After installation of the Conax adaptor, the casing was filled with Midel oil

in order to further resist the flow of water and clay along the casing, which both affect the normal stress build up in the clay around the packers.

8. Remedial action for leakage of packers

The pressure losses observed in packers 1 and 2 appear to be due to leakage of the packers. This is supported by observations made during de-airing of some of the pressure lines in both the monitoring piezometers and the packers, which confirmed the presence of oil in the filters. The progressive increase in inflation pressure measured in the packers since the leakage was detected suggests that the leakage is small and that it seals itself when the contact pressure with the clay is sufficiently high and uniform around the packers.

However, a leakage will affect the working of the packers and needs to be addressed before performing gas tests. SCK•CEN has taken contact with Solexperts to seek a solution for the leakage of the packers. Following this, a trial test was completed in February 2012 at Solexperts to test the effectiveness of a sealing compound which, if successful, could have been used to inject into the packers in an effort to stop the leakage. The first test results were not successful and Solexperts is pursuing contacts with the manufacturer to try to improve the product.

9. Planned gas tests

A series of gas tests have been planned for the mega packer system. These tests will be carried out when the condition of the packers has been fully evaluated to determine the impact of the observed leakage and the hydro-mechanical conditions around the packers have stabilized. The time required for the hydro-mechanical conditions to stabilize is taking much longer than initially anticipated due to the problems encountered during drilling and installation of the packers, as explained earlier in this report. The gas tests will use the various injection [IF] and detection [DF] filters installed in the packer sleeve (Figure 31) to inject and detect the gas flow as well as the multi-filter piezometers for additional monitoring during the tests.

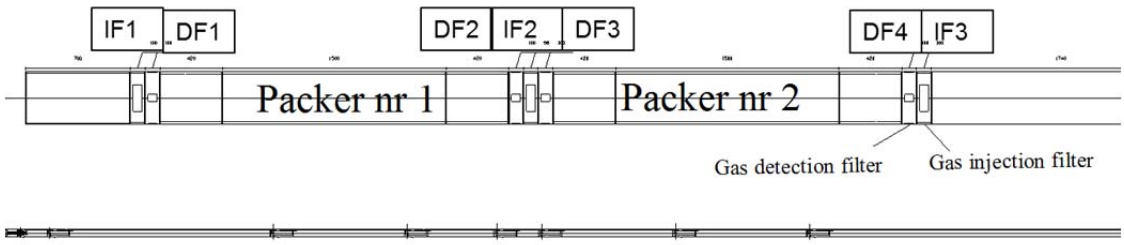

Figure 31 Planned future in-situ gas test set-up

As mentioned earlier, before the gas tests are carried out, the packers need first to be tested to assess the nature and influence of the observed leakage on the ability of the packers to sustain internal inflation pressure. These tests will be carried out as soon as the convergence of the clay around the packers has stabilized.

10. Conclusions and final remarks

The drilling of the large-diameter borehole encountered a highly abrasive pyrite zone at the depth of 14.5 m and again between 17.5 and 19.5 m. These abrasive zones caused significant wear to the drill head requiring the complete rebuilding of the cutting blades. Eventually, the drill head became blocked at 18.5 m requiring significant efforts to remove it from the borehole. The blockage was likely caused by the collapse of the borehole behind the head in

the pyrite zone. It is also possible that blocks of pyrite fell into the borehole further contributing to the blockage.

During the attempts performed to free the drill head, the drill rods were kept rotating in order to keep the borehole open and prevent further collapse. This created a large cavity at the end of the borehole and resulted in a significant deviation of its alignment. These events have seriously affected the quality of the installation and the recovery of the clay.

The inflation pressure losses observed in packers 1 and 2 appear to be due to leakage of the packers. This is supported by observations made during de-airing of some of the pressure lines in both the monitoring piezometers and the packers, which confirmed the presence of oil in the filters. The increase in inflation pressure measured in the packers suggests that the leakage is small and that it seals itself when the contact pressure with the clay is sufficiently high and uniform around the area of the leakage. However, a leakage will affect the working of the packers and needs to be addressed before the gas tests can be carried out. Plans are underway to address these issues as soon as the clay has converged sufficiently around the packers and hydro-mechanical properties of the clay stabilize.